PANDA EXPRESS
MINI-MALL, BLDG 103, SPACE 115
INGERSOLL ST, FORT BENNING, GA
(BID SET - NOT FOR CONSTRUCTION)

AFF	ABOVE FINISHED FLOOR
ALUM.	ALUMINUM
BV	BALL VALVE (FULL PORT)
B.O.	BOTTOM OF
C.	CONDUIT
CO	CONDUIT ONLY
CW	COLD WATER
(E)	EXISTING
EC	ELECTRICAL CONTRACTOR
EWH	ELECTRICAL WATER HEATER
EXT.	EXTERIOR
FOF	FACE OF FINISH
FOS	FACE OF STUD
F.S.	FLOOR SINK
G.C. OR GC	GENERAL CONTRACTOR
H.W.	HOT WATER
ID	INDIRECT DRAIN
INT.	INTERIOR
K.E.C.	KITCHEN EQUIP. CONTRACTOR
L.L.	LANDLORD
MC	MECHANICAL CONTRACTOR
(N)	NEW
NIC	NOT IN CONTRACT
NTS	NOT TO SCALE
OA	OUTSIDE AIR
O.C.	ON CENTER
PC	PLUMBING CONTRACTOR
RAR	RETURN AIR REGISTER
R.I.H.	ROUGH-IN HEIGHT
S.S.	STAINLESS STEEL
STL.	STEEL
STRUCT.	STRUCTURE, STRUCTURAL
T.O.	TOP OF
WCO	WASTE CLEAN OUT

ABBRIVIATIONS
G-001

D1 DOOR TYPE

W1 WINDOW TYPE

TA FLOOR FINISH

W4 WALL TYPE

1 STRUCTURAL GRID

C1 CEILING FINISH

P-C WALL FINISH

34 KITCHEN EQUIPMENT

MARK OF ELEVATION - CONTROL POINT

A/A1.0 DETAIL

A A-2.0 SECTION

NEW DOOR

T TEMPERED GLAZING

A A-2.0 EXTERIOR ELEVATION

1/A-200 INTERIOR ELEVATION

U.N.O. - UNLESS NOTED OTHERWISE

F.D. - FLOOR DRAIN

SYMBOLS
G-001

PROJECT DESCRIPTION:
TENANT IMPROVEMENT OF AN EXISTING FOOD TENANT SPACE FOR A PANDA EXPRESS RESTAURANT

SCOPE OF WORK:
NEW KITCHEN EQUIPMENT, CEILING WORK,
NEW LIGHTING, NEW EXHAUST HOOD, NEW INTERIOR FINISHES

REFERENCE CODES:
2018 INTERNATIONAL BUILDING CODE (IBC)
2018 INTERNATIONAL EXISTING BUILDING CODE (IEBC)
2018 INTERNATIONAL FUEL GAS CODE (IFGC)
2018 INTERNATIONAL MECHANICAL CODE (IMC)
2018 INTERNATIONAL PLUMBING CODE (IPC)
2018 INTERNATIONAL FIRE CODE (IFC)
2018 INTERNATIONAL ENERGY CONSERVATION CODE (IECC)
2018 NFPA 101

NUMBER OF STORIES:	1-STORY BUILDING
FIRE SPRINKLER:	SPRINKLERED
PROJECT OCCUPANCY:	A-2 (RESTAURANT)
LEASE AREA:	810 SF

OCCUPANT LOAD CALCULATION:

KITCHEN/ SERVICE:	600 SF/ 200 SF = 3 OCCUPANTS
STORAGE:	210 SF/ 300 SF = 2 OCCUPANT
TOTAL:	5 OCCUPANTS
NUMBER OF EMPLOYEES:	5 EMPLOYEES PER SHIFT/ 2-SHIFTS PER DAY

PROJECT SUMMARY/ CODE ANALYSIS
G-001

1. IT SHALL BE THE RESPONSIBILITY OF THE GENERAL CONTRACTOR TO FULLY EXAMINE THE SITE CONDITION, AND AVAILABLE UTILITIES AND TO NOTIFY THE OWNER'S REPRESENTATIVE, IN WRITING OF ANY AND ALL DISCREPANCIES BETWEEN THE SAID EXISTING CONDITIONS AND THESE DRAWINGS. NO CLAIMS FOR ADDITIONAL COMPENSATION SHALL BE MADE OR SHALL BE VALID UNLESS WRITTEN NOTIFICATION IS RECEIVED BY THE OWNER'S REPRESENTATIVE AND THE ADDITIONAL COMPENSATION IS APPROVED IN ADVANCE OF PROCEEDING WITH THE WORK.
2. IN ADDITION TO THE GENERAL NOTES LISTED HEREIN, A.I.A. DOCUMENT A201 GENERAL CONDITIONS OF THE CONTRACT FOR CONSTRUCTION SHALL APPLY.
3. ALL WORK SHALL BE PERFORMED AS TO COMPLY WITH ALL GOVERNING STATUTES, ORDINANCES, REGULATIONS, CODES AND INSURANCE RATING BOARDS. NO WORK SHALL COMMENCE UNTIL ALL GOVERNMENTAL AND JURISDICTIONAL PERMITS AND APPROVALS ARE OBTAINED.
4. ALL WORK SHALL BE PERFORMED IN A FIRST CLASS MANNER AND SHALL BE IN GOOD AND USABLE CONDITION AT THE DATE OF COMPLETION THEREOF.
5. UNDER NO CIRCUMSTANCES SHALL THE CONTRACTOR INSTALL OR PERMIT TO BE INSTALLED, ANY MATERIALS CONTAINING ASBESTOS.
6. THE TERM "OWNER" OR "TENANT" SHALL REFER TO PANDA EXPRESS AND ITS AGENTS OR REPRESENTATIVES. THE TERM "GENERAL CONTRACTOR" AND "G.C." SHALL REFER TO THE PERSON AND/OR PERSONS WHO HAVE CONTRACTED OR SUBCONTRACTED FOR THE WORK.
7. THE ABBREVIATION OF "N.I.C." INDICATES WORK AND OR MATERIAL THAT IS NOT IN THE CONTRACT OF THE GENERAL CONTRACTOR, HOWEVER THIS DOES NOT RELIEVE THE G.C. OF THE RESPONSIBILITY OF COORDINATION.
8. THE LOCATIONS OF EXISTING UTILITIES ARE SHOWN IN AN APPROXIMATE WAY ONLY AND HAVE NOT BEEN INDIVIDUALLY VERIFIED BY THE OWNER OR HIS REPRESENTATIVE. THE CONTRACTOR SHALL DETERMINE THE EXACT LOCATION OF ALL EXISTING UTILITIES BEFORE COMMENCING WORK, AND AGREES TO BE FULLY RESPONSIBLE FOR ANY AND ALL DAMAGES WHICH MIGHT OCCUR BY THE CONTRACTOR'S FAILURE TO EXACTLY LOCATE AND PRESERVE ANY AND ALL UTILITIES.
9. ALL WALL & CEILING CONSTRUCTION SHALL BE SUPPORTED BY STRUCTURE & NOT BY ROOF DECK IF APPLICABLE.
10. ASBESTOS/ LEAD BASED PAINT REVIEW IS REQUIRED.
11. ENSURE ACM AND LPB AREA CORRECTLY DEALT WITH DURING PROJECT.
12. ENSURE DUST CONTROLS PROTOCOLS ARE ADHERED TO, AS IT APPEARS FACILITY WILL REMAIN IN OPERATION DURING THE RENOVATION.

GENERAL NOTES
G-001

PROJECT LOCATION

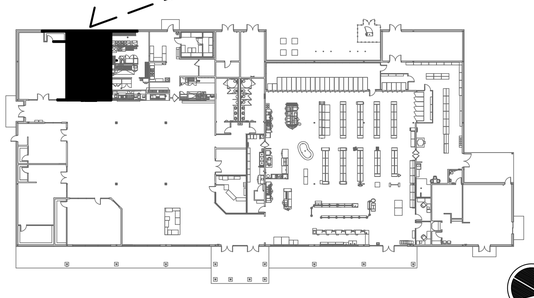

NORTH

KEY PLAN
G-001

PROJECT LOCATION

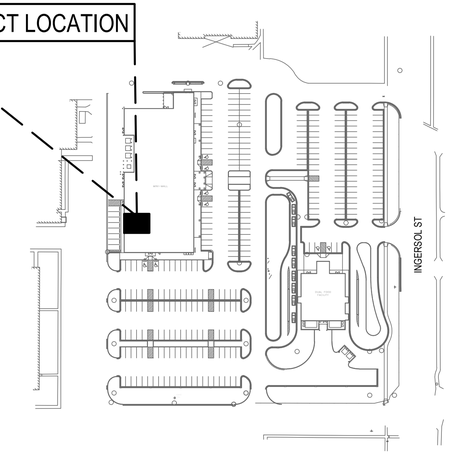

NORTH

LOCATION MAP
G-001

BASE CONTACT:
RUTCHEL WILLIAMS
SERVICES BUSINESS MANAGER
FORT BENNING ARMY & AIR FORCE
EXCHANGE SERVICE
EMAIL:williamsrutc@aafes.com
CELL: (706) 662-9177
MAIN: (706) 682-0562 X207

PROJECT CONTACT:
ATTN: KENNY TRINH
FOCUS GROUP
2388 COLBY COURT
SNELLVILLE, GA 30078
EMAIL: kenny.trinh@pandarg.com
PHONE: (404) 860-3808

ARCHITECT:
GARY WANG & ASSOCIATES
1000 CORPORATE CENTER DRIVE, SUITE 550
MONTEREY PARK, CA 91754
ATTN: DALMAR DURAN
EMAIL: dalmar@garywang.com
CELL: (323) 243-3608

MPE:
MARSHALL & BOLLWERK ENGINEERING
8681 HWY 92, SUITE 400
WOODSTOCK, GA 30189
ATTN: MIKE JONES
EMAIL: mjones@mbeinc.net
CELL: (678) 795-0333

TEAM DIRECTORY
G-001

SHEET #	TITLE
GENERAL	
G - 001	TITLE SHEET
G - 002	SPECIFICATIONS
G - 003	
ARCHITECTURAL	
D - 100	DEMO PLAN
A - 101	KITCHEN PLAN
A - 102	FLOOR PENETRATION PLAN
A - 103	FLOOR PLAN
A - 104	FLOOR FINISH PLAN
A - 105	REFLECTED CEILING PLAN
A - 106	ROOF PLAN
A - 200	INTERIOR ELEVATIONS
A - 201	INTERIOR ELEVATIONS
A - 202	INTERIOR ELEVATIONS
A - 400	ARCHITECTURAL DETAILS
A - 401	ARCHITECTURAL DETAILS
A - 402	ARCHITECTURAL DETAILS
A - 403	ARCHITECTURAL DETAILS
A - 405	ARCHITECTURAL DETAILS
A - 406	ARCHITECTURAL DETAILS
A - 407	ARCHITECTURAL DETAILS
A - 408	ROOF SUPPORT DETAILS
MECHANICAL	
M - 000	MECHANICAL NOTES, SPECIFICATIONS
M - 100	HVAC FLOOR PLAN/ HVAC FLOOR PLAN
M - 500	HOOD DETAILS
M - 501	HOOD DETAILS
H - 000	CAPTIVE AIRE HOOD DRAWINGS
H - 001	CAPTIVE AIRE HOOD DRAWINGS
H - 002	CAPTIVE AIRE HOOD DRAWINGS
H - 003	CAPTIVE AIRE HOOD DRAWINGS
H - 004	CAPTIVE AIRE HOOD DRAWINGS
PLUMBING	
P -100	WATER AND GAS PLAN/ SPECIFICATIONS
P -101	WASTE AND VENT PLAN/ SCHEDULES
P - 400	RISER DIAGRAMS
P - 500	PLUMBING DETAILS
ELECTRICAL	
E - 000	ELECTRICAL NOTES, SYMBOLS/ SPECIFICATIONS
E - 001	ELECTRICAL SCHEDULES
E - 100	POWER FLOOR PLAN
E - 101	LIGHTING FLOOR PLAN
E - 104	ROOF POWER PLAN
E - 200	ELECTRICAL ELEVATIONS
E - 400	ELECTRICAL DETAILS/ DIAGRAMS
E - 601	PANEL SCHEDULES/ SINGLE LINE DIAGRAM

SHEET INDEX
G-001

PANDA RESTAURANT GROUP INC.
1683 Walnut Grove Ave.
Rosemead, California
91770
Telephone: 626.799.9898
Facsimile: 626.372.8288

All ideas, designs, arrangement and plans indicated or represented by this drawing are the property of Panda Express Inc. and were created for use on this specific project. None of these ideas, designs, arrangements or plans may be used by or disclosed to any person, firm, or corporation without the written permission of Panda Express Inc.

REVISIONS:

ISSUE DATE:

1	35% SUBMITTAL	04/24/2020
2	95% SUBMITTAL	05/30/2020

DRAWN BY: STAFF

PANDA PROJECT #: D7432
ARCH PROJECT #:

GARY WANG
& ASSOCIATES, INC.
1000 Corporate Center Dr., Ste. 550
Monterey Park, CA 91754
TEL: (626) 288-6898 FAX: (626) 768-7101
http://www.garywang.com

LICENSED ARCHITECT
GARY L. WANG
No. C-32569
REN. 04-30-21
STATE OF CALIFORNIA
05/30/2020

BID SET (2020/05/28) NOT FOR CONSTRUCTION

PANDA EXPRESS
MINI-MALL - SPACE 115
INGERSOLL STREET
FT BENNING, GA

G-001
TITLE SHEET

GENERAL CONDITIONS FOR THE CONTRACT FOR CONSTRUCTION

ARTICLE 1 - GENERAL PROVISIONS

1. THE STANDARD FORM OF GENERAL CONDITIONS, CURRENT EDITION OF THE AMERICAN INSTITUTE OF ARCHITECTS, DOCUMENT NO. A-201, ARE HEREBY MADE A PART OF THESE SPECIFICATIONS AND SHALL APPLY THE SAME AS IF REPEATED HERE IN FULL. COPIES OF SAME SHALL BE ON FILE AT THE OFFICE OF THE ARCHITECT.

2. ALL INTERESTED PARTIES SHALL BE GOVERNED BY THOSE GENERAL CONDITIONS IN ALL MATTERS PERTAINING TO THIS PROJECT, DURING THE PERIOD OF CONSTRUCTION, AND PARTICIPATION IN THE PROJECT WILL BE CONSIDERED PRESUMPTIVE EVIDENCE OF THE PARTICIPANT'S FULL UNDERSTANDING OF, AND AGREEMENT WITH, THE CONDITIONS OF THE REFERENCED GENERAL CONDITIONS.

3. THE GENERAL CONDITIONS, SPECIAL PROVISIONS, GENERAL REQUIREMENTS, AND TECHNICAL SPECIFICATIONS, ALONG WITH THE OTHER CONDITIONS WHICH FOLLOW, AND AS PROVIDED, AS WELL AS ALL APPLICABLE PROVISIONS OF THE SPECIFICATIONS, FORM A PART OF THE CONTRACT AND SHALL GOVERN EACH CONTRACTOR ENGAGED IN WORK ON THE PROJECT WHETHER THE WORK BE LET UNDER SEPARATE CONTRACTS OR UNDER A SINGLE CONTRACT.

4. BASIC DEFINITIONS:
THE CONTRACT DOCUMENTS CONSIST OF THE AGREEMENT BETWEEN OWNER AND CONTRACTOR, CONDITIONS OF THE CONTRACT AND ALL DOCUMENTS LISTED BELOW.

THE CONTRACT DOCUMENTS SHALL INCLUDE: DRAWINGS AS LISTED IN THE INDEX OF THIS SET. SPECIFICATION DIVISION 1-16 INCLUSIVE. ALL MODIFICATIONS ISSUED AFTER EXECUTION OF THE CONTRACT. EQUIPMENT INSTALLATION HAND BOOK.

5. PHRASES USED IN THE SPECIFICATIONS ARE DEFINED AS FOLLOWS:
"AS SHOWN" - AS SHOWN ON THE ACCOMPANYING DRAWINGS.

"PROVIDE" - PROVIDE AND INSTALL COMPLETE, WITH ALL NECESSARY ACCESSORIES AND INCIDENTAL MATERIALS AND SUPPLIES.

"PROVIDED BY OWNER" - MATERIALS OR GOODS WILL BE DELIVERED F.O.B. JOBSITE BY THE OWNER AT NO EXPENSE TO THE GENERAL CONTRACTOR. UNLOADING, STORAGE, INSTALLATION, AND/OR ASSEMBLY OF ITEMS "PROVIDED BY OWNER" SHALL BE BY GENERAL CONTRACTOR UNLESS OTHERWISE NOTED.
"INSTALL" - INSTALL ITEMS, COMPLETE, PROVIDING ALL INCIDENTAL AND NECESSARY SUPPLIES AND MATERIALS.

"GENERAL CONTRACTOR" - THE GENERAL CONTRACTOR OR ANY OR ALL OF HIS VARIOUS SUBCONTRACTORS.

"OWNER" - ALL GENERAL CONDITIONS REFERENCES TO "OWNER" SHALL REFER TO PANDA EXPRESS, INC.

"CONTRACTOR" AND "GENERAL CONTRACTOR" AS STATED IN THESE DOCUMENTS REFER TO THE SAME ENTITY.

ARTICLE 2 - INSURANCE

THE GENERAL CONTRACTOR AND ALL SUBCONTRACTORS ARE REQUIRED TO OBTAIN THE FOLLOWING INSURANCES, AND AT THEIR REQUEST FURNISH EVIDENCE TO PANDA EXPRESS. ALL INSURANCE SHALL NAME PANDA RESTAURANT GROUP, INC., AND THE ARCHITECTS. AS ADDITIONAL INSURED PARTIES.

WORKMAN'S COMPENSATION INSURANCE IN ACCORDANCE WITH THE LAWS OF THE STATE IN WHICH THE PROPERTY IS LOCATED AND PANDA EXPRESS REQUIREMENTS. PANDA EXPRESS SHALL KEEP A COPY IN FILE ALL TIME.

COMPREHENSIVE GENERAL LIABILITY INSURANCE INCLUDING CONTRACTUAL LIABILITY WITH LIMITS SET FORTH BY THE PANDA EXPRESS.

AUTOMOBILE LIABILITY INSURANCE INCLUDING CONTRACTUAL LIABILITY AS SET FORTH BY THE PANDA EXPRESS.

BUILDER'S RISK INSURANCE IN THE AMOUNT OF THE ESTIMATED COST OF THE PROJECT.

THE CONTRACTOR AGREES TO INDEMNIFY AND SAVE HARMLESS PANDA EXPRESS, ITS AGENTS, SERVANTS, AND EMPLOYEES, AND THE OWNER'S ARCHITECT AND ENGINEER FROM AND AGAINST ANY AND ALL LIABILITY OR DAMAGE TO PROPERTY OCCASIONED BY ANY ACT OR OMISSION OF THE CONTRACTOR, HIS SUBCONTRACTORS, SERVANTS, OR EMPLOYEES, INCLUDING ANY AND ALL EXPENSE, LEGAL OR OTHERWISE, WHICH MAY BE INCURRED BY PANDA EXPRESS, ITS AGENTS SERVANTS, OR EMPLOYEES IN THE DEFENSE OF ANY CLAIM, SETTLEMENT OR SUIT.

ARTICLE 3 EXTRA WORK

1. ANY AND ALL WORK WHICH IS PERFORMED BY THE CONTRACTOR, OR BY ANY SUBCONTRACTOR, WITHOUT HAVING SPECIFIC APPROVAL FROM PANDA EXPRESS IN WRITING, SHALL BE PERFORMED BY SAID CONTRACTOR AT HIS OWN RISK WITHOUT ANY OBLIGATION OR RESPONSIBILITY OF PANDA EXPRESS OR THE ARCHITECT. ALL WORK WHICH IS ABOVE AND BEYOND THE SCOPE OF THE DRAWINGS AND SPECIFICATIONS, OR ANY PART OF THE CONSTRUCTION DOCUMENTS, MUST BE SPECIFICALLY AUTHORIZED BY PANDA EXPRESS IN WRITING. ALL REQUESTS FOR ADDITIONAL PAYMENTS MUST BE APPROVED BY THE OWNER PRIOR TO THE START OF THAT WORK.

2. THE FOLLOWING GENERAL REQUIREMENTS SUPPLEMENT AND/OR SUPERSEDE THE FOREGOING GENERAL AND SUPPLEMENTARY CONDITIONS FOR CONTRACT WORK AND ARE HEREBY CONSIDERED A PART OF THE CONTRACT DOCUMENTS.

DIVISION 1 GENERAL REQUIREMENTS

1. SCOPE

SCOPE ALL OF THE WORK UNDER EACH HEADING OF THESE SPECIFICATIONS SHALL BE GOVERNED BY THE GENERAL CONDITIONS, SPECIAL PROVISIONS, THE DRAWINGS AND THE SPECIFICATIONS, AS WELL AS THE FOLLOWING GENERAL REQUIREMENTS

THE WORK UNDER EACH HEADING OF THESE SPECIFICATIONS SHALL INCLUDE ALL LABOR, MATERIAL, EQUIPMENT AND SERVICES NECESSARY FOR AND SAID HEADING AS INDICATED ON THE DRAWINGS, SET FORTH IN THE SPECIFICATIONS, OR OTHERWISE REQUIRED.

WORK DONE HEREUNDER INCLUDES FURNISHING ALL LABOR, MATERIAL SERVICES, AND EQUIPMENT NECESSARY AND/OR INCIDENTAL TO PERFORM ALL WORK THROUGH THE PROPER COMPLETION OF ALL WORK AS MAY BE FURTHER SPECIFIED AND/OR SHOWN ON THE PLANS, OR OTHERWISE REQUIRED.

2. CONFLICTS BETWEEN DOCUMENTS

IN CASE OF CONFLICT BETWEEN DRAWINGS AND SPECIFICATIONS THE CONTRACTOR WILL BE DEEMED TO HAVE ESTIMATED ON, AND AGREED TO PROVIDE, THE GREATEST QUANTITY AND BETTER QUALITY OF MATERIALS AND WORK.

INCLUDE GENERAL CONSTRUCTION, ELECTRICAL, PLUMBING, HVAC, AND INSTALLATION OF ALL SUCH WORK EXCEPT AS HEREINAFTER MAY BE REQUIRED.

3. ITEMS FURNISHED BY PANDA AND INSTALLED BY GENERAL CONTRACTOR

IT SHALL BE THE CONTRACTOR'S SOLE RESPONSIBILITY TO RECEIVE, CHECK AND CONFIRM THE ARRIVAL IN GOOD ORDER, OF ALL ITEMS CALLED FOR TO BE FURNISHED BY PANDA EXPRESS AND INSTALLED BY THE CONTRACTOR.

THE CONTRACTOR SHALL NOTIFY PANDA EXPRESS (IN WRITING) OF ANY SUCH ITEMS MISSING OR DAMAGED WITHIN 3 DAYS OF RECEIVING DATE. FAILURE TO SO NOTIFY PANDA EXPRESS WILL BE CONSIDERED PROOF PRESUMPTIVE THAT ALL SAID ITEMS HAVE ARRIVED UNDAMAGED, AND IN THE PROPER QUANTITIES, AND IT SHALL THEN BE THE CONTRACTOR'S RESPONSIBILITY (AT HIS OWN COST) TO PROMPTLY REORDER, REPLACE AND/OR REPAIR ANY SUCH ITEMS NEEDED FOR THE PROPER COMPLETION OF THIS PROJECT, ON THE AGREED TO DATE OF COMPLETION.

4. MEASUREMENTS

THE CONTRACTOR SHALL BE RESPONSIBLE FOR AN ACCURATE TAKING OF JOB SITE MEASUREMENTS, VERIFYING SAME, AND PROMPTLY FURNISHING EXACT JOB SITE MEASUREMENTS TO ALL PARTIES REQUIRING SAME. CONTRACTOR MUST NOTIFY PANDA EXPRESS AND THE ARCHITECT OF ANY DISCREPANCIES IMMEDIATELY. THE CONTRACTOR SHALL CHECK SALES CASEWORK SHOP DRAWINGS AS TO CORRECT ANGLES AND FIT TO THE EXISTING SPACE AS SHOWN. THE CONTRACTOR SHALL PERMANENTLY LAYOUT THE CASEWORK ON THE FLOOR PRIOR TO THE CONSTRUCTION OF WALL, CEILING, LIGHT FIXTURES, ETC.

WRITTEN DIMENSIONS SHALL TAKE PRECEDENCE OVER SCALED DIMENSIONS. LARGER SCALE DRAWINGS SHALL TAKE PRECEDENCE OVER SMALLER SCALE DRAWINGS.

5. SUBSTITUTIONS

BIDDERS MAY OFFER SUBSTITUTIONS FOR ANY ITEM SPECIFICATION BY SUBMITTING IN WRITING AS OUTLINED IN SPACE PROVIDED ON PROPOSAL FORM.

IT SHALL BE UNDERSTOOD BY ALL HEREIN CONCERNED THAT ANY PROPOSAL SUBSTITUTION SHALL HAVE THE WRITTEN APPROVAL OF ARCHITECT AND/OR OWNER'S REPRESENTATIVE, BEFORE BEING USED BY CONTRACTOR, OTHERWISE IT WILL BE ASSUMED THAT THE CONTRACTOR'S TOTAL BID IS BASED UPON THE MATERIAL OR ITEM OF EQUIPMENT SPECIFIED.

6. EXAMINATION OF SITE AND BUILDING

BEFORE SUBMITTING A PROPOSAL, EACH BIDDER SHALL EXAMINE ALL DOCUMENTS, VISIT THE SITE, VERIFYING ANY SPECIAL CHARGES OR REQUIREMENTS, COMPARING EACH TO THE OTHER AND INFORMING THEMSELVES OF ALL CONDITIONS UNDER WHICH WORK IS TO BE PERFORMED. INCLUDE ALL RELEVANT MATTERS WHICH MAY AFFECT THE WORK OR THE BIDDING. EACH BIDDER SHALL BASE HIS PROPOSAL ON MATERIAL, METHODS AND/OR EQUIPMENT COMPLYING WITH THE SPECIFICATIONS AND DRAWINGS.

THE WORDS "THE CONTRACTOR SHALL" ARE INTENTIONALLY OMITTED FROM THE SPECIFICATIONS. WHERE DIRECTIONS OR INSTRUCTIONS ARE STATED, WITHOUT SPECIFIC REFERENCE AS TO WHO IS RESPONSIBLE, THE INFERENCE IS INTENDED TO BE THE CONTRACTOR FOR THE WORK IN THE SPECIFICATION SECTION IN WHICH THE DIRECTIONS OR INSTRUCTIONS ARE INTENDED.

7. CODES AND STANDARDS

ALL WORK, MATERIALS AND INSTALLATION SHALL BE IN STRICT ACCORDANCE WITH ALL ORDINANCES, STATE AND LOCAL BUILDING CODES, LATEST EDITION, OF THE AUTHORITIES HAVING JURISDICTION.

DESIGN LOADS: LOADS AND CODE RESTRICTIONS FOR ALL DESIGN CONSIDERATIONS SHALL CONFORM TO THE LOCAL AND STATE CODES, AND ALL GOVERNING CODES.

8. PERMITS

THE CONTRACTOR SHALL BE RESPONSIBLE FOR THE PROPER APPLICATION FOR AND SECURING OF ALL NECESSARY TRADE PERMITS, AS WELL AS THE OBSERVANCE OF ALL APPLICABLE CITY, COUNTY, STATE AND FEDERAL LAWS, REGULATIONS OR ORDINANCES AND SHALL INCLUDE IN THEIR PROPOSAL COST OF SAME.

9. INSTALLATION OF MATERIALS AND EQUIPMENT

ATTENTION IS HEREBY DIRECTED TO THE FOLLOWING REQUIREMENT FOR EACH PRIME AND SUBCONTRACTOR: THAT THE APPLICATION OF A MATERIAL AND/OR EQUIPMENT ITEM TO UNSATISFACTORY WORK INSTALLED BY OTHERS, CONSTITUTES ACCEPTANCE OF THAT WORK AND ASSUMPTION OF FULL RESPONSIBILITY FOR PRIOR TO STARTING THE SPECIFIC APPLICATION, NOTIFY IN WRITING THE ARCHITECT AND/OR OWNER'S REPRESENTATIVE OF ANY DEFECT OR DEFICIENCY WHICH WOULD IMPAIR COMPLETE AND SATISFACTORY APPLICATIONS OR INSTALLATION OF HIS WORK OR GUARANTEE.

MANUFACTURER'S INSTRUCTIONS:
WHERE INSTALLATIONS INCLUDE MANUFACTURED PRODUCTS, COMPLY WITH MANUFACTURER'S APPLICABLE INSTRUCTIONS AND RECOMMENDATIONS FOR INSTALLATION, TO THE EXTENT THESE ARE MORE EXPLICIT OR MORE STRINGENT THAN REQUIREMENTS INDICATED IN THE CONTRACT DOCUMENTS.

PROVIDE ATTACHMENT AND CONNECTION DEVICES AND METHODS FOR SECURING WORK PROPERLY AS IT IS INSTALLED; TRUE TO LINE AND LEVEL, AND WITHIN RECOGNIZED INDUSTRY TOLERANCES IF NOT OTHERWISE INDICATED. ALLOW FOR EXPANSIONS AND BUILDING MOVEMENTS.

VISUAL EFFECT:
PROVIDE UNIFORM JOINT WIDTHS IN EXPOSED WORK, ORGANIZED FOR BEST POSSIBLE VISUAL EFFECT. REFER QUESTIONABLE VISUAL-EFFECT CHOICES TO ARCHITECT/OWNER'S REPRESENTATIVE FOR FINAL DECISION. RECHECK MEASUREMENTS AND DIMENSIONS OF THE WORK, AS AN INTEGRAL STEP OF STARTING EACH INSTALLATION.

MOUNTING HEIGHTS:
WHERE MOUNTING HEIGHTS ARE NOT INDICATED, MOUNT INDIVIDUAL UNITS OF WORK AT INDUSTRY-RECOGNIZED STANDARD MOUNTING HEIGHTS FOR APPLICATIONS INDICATED. REFER QUESTIONABLE MOUNTING HEIGHT CHOICES TO ARCHITECT/OWNER'S REPRESENTATIVE FOR FINAL DECISION. CONFORM WITH APPLICABLE ACCESSIBILITY CODES WHERE REQUIRED.

10. PROTECTION AND CLEAN-UP

THE CONTRACTOR SHALL BE RESPONSIBLE FOR THE PROPER PROTECTION OF ADJACENT ITEMS AND SURFACES FROM DAMAGE RESULTING FROM THE FURNISHING OR INSTALLATION OF HIS WORK AND SHALL PROMPTLY REPLACE, AT HIS OWN COST, SUCH DAMAGED WORK. HE SHALL ALSO BE RESPONSIBLE FOR THE PROPER PROTECTION OF HIS AND OTHERS WORK FROM DAMAGE BY ANY INCLUDING FREEZING OR OVERHEATING. USE PLASTIC COVERING OVER FURNITURE, DISPLAY CASES, EQUIPMENT AND FINISHES. THE CONTRACTOR SHALL REMOVE ALL DEBRIS FROM THE PREMISES ON A DAILY BASIS; ALL DUST AND CONSTRUCTION DEBRIS ARE TO BE REMOVED. ANY BROKEN, DAMAGED, MARRED, UNCLEAN, OR OTHERWISE IMPERFECT WORK SHALL BE CORRECTED BY THE CONTRACTOR BEFORE HIS WORK SHALL BE CONSIDERED COMPLETE. USE DUST BARRIERS.

UPON COMPLETION OF THE WORK CONTRACTOR SHALL CLEAN INTERIOR AND EXTERIOR OF ALL GLASS AND GLAZING, FLOORS, WALLS AND CEILING SURFACES, ELECTRICAL FIXTURES, MECHANICAL EQUIPMENT, ETC.; IT IS NECESSARY TO REMOVE ALL DIRT, STAINS, AND MARKS. THE SIGNS, GLASS AND WOOD SHALL BE CLEANED AND POLISHED. THE STORE SHALL BE MADE CLEAN AND FIT FOR IMMEDIATE OCCUPANCY BY AN INDEPENDENT CLEANING AGENT, WITH THE APPROVAL OF PANDA EXPRESS, AT THE CONTRACTOR'S EXPENSE.

GENERAL CONTRACTOR SHALL SUPERVISE AND SCHEDULE PROPER INSTALLATION OF ALL PARTS OF WORK PERTAINING TO A FINISHED PRODUCT BY HIM OR BY THE OWNER.

GENERAL CONTRACTOR SHALL SUPERVISE AND SCHEDULE PROPER INSTALLATION OF ALL PARTS OF WORK PERTAINING TO A FINISHED PRODUCT BY CONTRACTOR, SUBCONTRACTORS OR PANDA EXPRESS.

11. GUARANTEE WARRANTY

THE CONTRACTOR SHALL GUARANTEE THE WORK TO BE FREE FROM DEFECTS OF MATERIALS OR WORKMANSHIP, INCLUDING DISCOLORATION, RATTLING AND LEAKING, FOR A PERIOD OF ONE YEAR FROM THE DATE OF FINAL PAYMENT. APPLICATION BY THE CONTRACTOR FOR FINAL PAYMENT SHALL BE CONSIDERED AS PRESUMPTIVE EVIDENCE OF HIS FULL UNDERSTANDING OF AND AGREEMENT WITH CONDITIONS OF THE GUARANTEE PROVISION, AND HE SHALL REMOVE AND REPLACE WITH NEW, AT HIS OWN EXPENSE, ALL SUCH WORK OR MATERIALS FOUND BY PANDA EXPRESS'S REPRESENTATIVE TO BE DEFECTIVE WITHIN THE GUARANTEE PERIOD.

12. SUBCONTRACTORS

THE CONTRACTOR AGREES THAT HE IS FULLY RESPONSIBLE TO THE OWNER FOR THE ACTS AND OMISSIONS OF HIS SUBCONTRACTORS AND OF PERSONS DIRECTLY EMPLOYED BY HIM. NOTHING CONTAINED IN THE CONTRACT DOCUMENTS SHALL CREATE ANY CONTRACTUAL RELATION BETWEEN ANY SUBCONTRACTOR AND PANDA EXPRESS. THE CONTRACTOR SHALL COOPERATE WITH PANDA AND OTHER CONTRACTORS PERFORMING WORK UNDER SEPARATE CONTRACTS TO ENSURE PROJECT PROGRESS ACCORDING TO SCHEDULE. THE CONTRACTOR SHALL COORDINATE WORK FOR THE VARIOUS TRADES INCLUDING PANDA EXPRESS'S VENDORS.

13. TEMPORARY FACILITIES

PROVIDE AND COMPLETE ALL PRELIMINARY WORK AND TEMPORARY CONSTRUCTION REQUIRED AS INDICATED AND REQUIRED.

TEMPORARY BARRICADES:
INSTALL TEMPORARY BARRICADE AS REQUIRED BY CITY OFFICIALS OR MALL MANAGEMENT IN MANNER STIPULATED BY SAME.

LIGHT AND POWER SHALL BE PROVIDED BY ELECTRICAL CONTRACTOR OR REUSE EXISTING FROM LOCATION OF LANDLORD'S SERVICE AND PAY ALL COST FOR SAME, FOR ALL CONTRACTOR(S) TO SUBJECT SPACE.

WATER SUPPLY:
THE CONTRACTOR SHALL MAKE ALL NECESSARY ARRANGEMENTS FOR PERMANENT WATER SERVICE, WATER METER, AND PRESSURE REGULATOR FOR ALL PURPOSES OF CONSTRUCTION, PAYING ALL COSTS IN CONNECTION WITH SAME, AND FOR ALL WATER USED. THIS SHALL INCLUDE ALL MEANS OF CONVEYING SAME TO PLACE WHERE REQUIRED.

ELECTRICITY:
THE CONTRACTOR SHALL MAKE ALL NECESSARY APPLICATIONS, PAY ALL DUES AND CHARGES, OBTAIN NECESSARY PERMITS, PROVIDE AND MAINTAIN ELECTRICAL ENERGY FROM DEVELOPERS PERMANENT ELECTRICAL FACILITIES FOR LIGHTING, POWER FOR ALL ELECTRIC TOOLS AND EQUIPMENT REQUIRED IN CONSTRUCTION OF ALL BRANCHES OF THE WORK AND PAY FOR ALL CURRENT USED.

FIRE PROTECTION:
OWNER'S CONTRACTOR SHALL PROVIDE FIRE EXTINGUISHERS WITHIN THE PREMISES AS REQUIRED BY CODE AND/OR INSURANCE COMPANIES, OR VERIFY THAT ONE IS EXISTING IN THE CASE OF REMODELING. DISCONNECT AND SEAL UTILITIES SERVING STRUCTURE TO BE DEMOLISHED, PRIOR TO START OF DEMOLITION WORK.

14. STRICTLY PROHIBITED WORK AND PRACTICES

INSTALLATION OF ANY COMBUSTIBLE MATERIALS ABOVE FINISHED CEILINGS OR IN ANY OTHER CONCEALED, NON-SPRINKLERED SPACE.

IMPOSING ANY STRUCTURAL LOAD, TEMPORARY OR PERMANENT, ON ANY PART OF THE WORK OR STRUCTURE WITHOUT APPROVAL.

ATTACHING ANY WORK TO METAL DECK OR HANGING FROM PLUMBING AND SPRINKLER PIPING OR CONDUIT.

15. POLLUTION CONTROLS

USE WATER SPRINKLING, TEMPORARY ENCLOSURES, AND OTHER SUITABLE METHODS TO LIMIT DUST AND DIRT RISING AND SCATTERED IN AIR TO LOWEST PRACTICAL LEVEL. COMPLY WITH GOVERNING REGULATIONS PERTAINING TO ENVIRONMENTAL PROJECTION. DO NOT USE WATER WHEN IT MAY CREATE HAZARDOUS OR OBJECTIONABLE CONDITIONS SUCH AS ICE, FLOODING AND POLLUTION.

CLEAN ADJACENT STRUCTURES AND IMPROVEMENTS OF DUST, DIRT AND DEBRIS CAUSED BY DEMOLITION OPERATIONS, AS DIRECTED BY ARCHITECT OR GOVERNING AUTHORITIES. RETURN ADJACENT AREAS TO CONDITION EXISTING PRIOR TO START OF WORK.

16. TURNOVER REQUIREMENTS

1. THE CONTRACTOR SHALL ARRANGE FOR ALL INSPECTIONS AND FURNISH OWNERS REPRESENTATIVE WITH THE CERTIFICATE OF OCCUPANCY. G.C. IS ALSO TO PROVIDE A TYPEWRITTEN LIST OF NAMES, ADDRESSES AND PHONE NUMBERS OF ALL SUB-CONTRACTORS AND MATERIAL SUPPLIERS.

2. THE CONTRACTOR SHALL BE RESPONSIBLE FOR HAVING THE ENTIRE STORE CLEAN AND SPOTLESS AT THE TIME OF FURNITURE INSTALLATION AND AT TURN OVER.

3. PRIOR TO THE STORE OPENING, CONTRACTOR IS TO ARRANGE FOR AN INDEPENDENT BALANCING CONTRACTOR TO BALANCE THE HVAC SYSTEM AND PROVIDE A COPY OF THE BALANCING REPORT TO OWNER'S REPRESENTATIVE.

4. CONTRACTOR TO TURN OVER ALL KEYS TO THE OWNER'S REPRESENTATIVE AND MARKING EACH KEY FOR IDENTIFICATION. THE CONTRACTOR SHALL SET ALL TIME CLOCKS, THERMOSTATS, ETC. PER OWNER'S REPRESENTATIVE'S REQUIREMENTS.

5. THE CONTRACTOR SHALL EXPLAIN THE OPERATION OF ALL MECHANICAL SYSTEMS TO THE OWNER'S REPRESENTATIVE AND PROVIDING COPIES OF OPERATION, MAINTENANCE AND WARRANTY MANUALS.

DIVISION 2 - SITE WORK

NOT USED

DIVISION 3 - CONCRETE

NOT USED

DIVISION 4 - MASONRY

NOT USED

DIVISION 5 - METALS

1. STEEL FRAMING

REFERENCE STRUCTURAL DRAWINGS FOR STEEL FRAMING SPECIFICATIONS

2. MISCELLANEOUS METALS

CUSTOM FABRICATE FERROUS METAL ITEMS 16 GAUGE AND HEAVIER. REFER TO DRAWINGS AND DETAILS.

3. METAL STUDS

INSTALL METAL FRAMING SYSTEMS IN ACCORDANCE WITH MANUFACTURER'S PRINTED OR WRITTEN INSTRUCTIONS AND RECOMMENDATIONS, UNLESS OTHERWISE INDICATED. INSTALL CONTINUOUS TRACK - SIZED TO MATCH STUDS. SECURE TRACKS AS RECOMMENDED BY STUD MANUFACTURER FOR TYPE OF CONSTRUCTION INVOLVED.

SET STUDS PLUMB, EXCEPT AS NEEDED FOR DIAGONAL BRACING OR REQUIRED FOR NON-PLUMB WALLS OR WARPED SURFACES.

INSTALL SUPPLEMENTARY FRAMING, BLOCKING AND BRACING IN METAL FRAMING SYSTEM WHENEVER WALL OR PARTITIONS ARE INDICATED TO SUPPORT FIXTURES, EQUIPMENT, SERVICES, CASEWORK, HEAVY TRIM AND FURNISHINGS AND SIMILAR WORK.

SECURE STUDS TO TOP AND BOTTOM RUNNER TRACKS BY EITHER WELDING OR SCREW FASTENING AT BOTH INSIDE AND OUTSIDE FLANGES.

INSTALL HORIZONTAL STIFFENERS IN STUD SYSTEM AS REQUIRED, SPACE (VERTICAL DISTANCE) AT NO MORE THAN 4'-6" O.C.

4. EXTERIOR ALUMINUM AWNINGS

DIVISION 6 - WOOD AND PLASTICS

1. WOOD FRAME AND ROOF TRUSSES

REFERENCE STRUCTURAL DRAWINGS FOR SPECIFICATIONS OF WOOD FRAMING AND TRUSSES

2. FINISH CARPENTRY MATERIALS

QUALITY ASSURANCE:
PERFORM FINISH CARPENTRY WORK IN ACCORDANCE WITH AWI QUALITY STANDARDS, PREMIUM GRADE. USE FULL LENGTH PIECES, MITER ALL JOINTS, SHOULDER JOINT AT DOOR JAMBS. FILL ALL NAIL HOLES AND SAND SMOOTH.

WOOD TRIM INTERIOR: VERTICAL GRAIN, RED OAK SURFACE ALL EXPOSED EDGES.

EXPOSED WOOD AT EXTERIOR: RESAWN DOUGLAS FIR, NO KNOTS, STAIN GRADE.

DIVISION 7 - THERMAL AND MOISTURE PROTECTION

NOT USED

DIVISION 8 - DOORS AND WINDOWS

NOT USED

DIVISION 9 - FINISHES

1. GYPSUM WALLBOARD

PROVIDE ALL WORK IN ACCORDANCE WITH MANUFACTURER'S DIRECTIONS AS REQUIRED HEREIN AND AS SHOWN ON THE DRAWINGS FOR COMPLETE ERECTION AND FINISH OF DRYWALL PARTITIONS.

COMPLY WITH "GYPSUM CONSTRUCTION AND HANDBOOK" BY UNITED STATES GYPSUM CO. AND "RECOMMENDED SPECIFICATIONS FOR THE APPLICATION AND FINISHING OF GYPSUM BOARD" BY THE GYPSUM ASSOCIATION FOR ALL INSTALLATION WORK.

FIRE-RATED GYPSUM WALLBOARD, ASTM C63078. USE 4 FEET WIDE SHEETS WITH LONG TAPERED EDGE. THICKNESS SHALL BE 5/8". UNITED STATES GYPSUM CO. SHEET-ROCK W/R FIRE CODE "C" FOR FIRE RATED PANELS. SEAL ALL EXPOSED AND CUT EDGES PER MANUFACTURERS RECOMMENDATIONS.

USE 5/8" MOISTURE RESISTANT GYPSUM BOARD IN AREAS SPECIFIED ON THE PLANS AND AT ALL TILE WORK WITHIN 48" OF WET AREAS. EACH SHEET SHALL BE MARKED BY THE MANUFACTURER INDICATING THE MOISTURE RESISTANT CAPABILITIES OF THE PRODUCT.

INSTALL GYPSUM WALLBOARD WITH LONG DIMENSION PERPENDICULAR TO FRAMING.

INSTALL PER MANUFACTURE'S WRITTEN INSTRUCTIONS.

METAL-STUDS-CHANNEL-TYPE, ROLL FORM 25 GAUGE MIN (UNLESS NOTED OTHERWISE), SIZE AS NOTED ON DRAWINGS.

CARRYING CHANNELS AND HANGING WIRE - 1-1/2" DEEP, 475 LBS PER 1,000 FEET. MINIMUM 8 GAUGE HANGING WIRE AT 48" O.C. EACH WAY.

FURRING CHANNELS - 7/8" HAT SHAPED.

FASTENING: NAILS-NO. 19 GUAGE, 1-3/8" LONG, 19/64" HEAD ANNULAR RING NAIL, 7" ON CENTER AT CEILING, 8" ON CENTER AT WALLS.

SCREWS - METAL SUSPENSION, SYSTEM, TYPE "S-12" BUGLE, SELF-TAPPING, 3/8" MINIMUM PENETRATION IN METAL FRAMING.

METAL EDGES SHALL BE APPLIED AT ALL EXPOSED CORNERS, ENDS, ETC.

ACCESS PANELS: INRYCO/MILCOR, (414) 383-4030; TYPE "M" WITH FLUSH SCREW DRIVE OPERATED LOCKS. IN GYPSUM DRYWALL AND CEILINGS USE PRIME COATED STEEL. IN TILE FINISH WALL AND "FRP" FINISH WALLS USE STAINLESS STEEL FRAMES AND PANELS.

2. CERAMIC TILE

STANDARDS: MORTAR AND GROUT MATERIALS AND INSTALLATION STANDARDS OF THE AMERICAN NATIONAL STANDARDS INSTITUTE (ANSI) AND STANDARD SPECIFICATION FOR CERAMIC TILE ANSI A137.1 APPLY TO THE WORK, EXCEPT AS OTHERWISE INDICATED.

MATERIALS: REFERENCE TILE SCHEDULE

TRIM SHAPES: SAME MATERIAL, SIZE, COLOR AND TEXTURE AS FIELD TILE UNLESS NOTED OTHERWISE.

EDGE STRIPS: PROVIDE AT EXPOSED EDGE OF TILE MEETING CARPET, WOOD OR RESILIENT FLOORING UNLESS NOTED OTHERWISE REFERENCE DRAWINGS FOR SIZE AND SHAPE.

CLEANING AND PROTECTION: CLEAN TILE IN ACCORDANCE WITH APPLICABLE ANSI STANDARD FOR TYPE OF TILE AND METHOD OF INSTALLATION USED AND MANUFACTURER'S INSTRUCTIONS. APPLY HEAVY KRAFT PAPER OR OTHER HEAVY PROTECTIVE COVERING TO PREVENT SURFACE DAMAGE.

3. LAY-IN CEILING TILE

PROVIDE ALL LABOR, MATERIALS, EQUIPMENT, ETC., REQUIRED TO SUPPLY AND INSTALL ARMSTRONG LAY-IN TILE AND CHICAGO METALLIC SUSPENSION SYSTEM, INCLUDING WIRE HANGERS, MAIN TEE RUNNERS, CROSS TEES, ANGLE MOLDING AND HOLD-DOWN CLIP WHERE REQUIRED. SEE REFLECTED CEILING PLAN AND COLOR LEGEND FOR MANUFACTURER AND TYPE.

SUSPENSION SYSTEM: 01. MAIN TEE RUNNERS SHALL BE INSTALLED AT 48" O.C. HAVING CROSS TEES AT 24" O.C. INCLUDING #425 ACCESSIBLE HOLD-DOWN CLIPS AND PERIMETER WALL MOLDING AT ALL VERTICAL ABUTTING SURFACES.

CONTRACTOR TO PROVIDE 1 CARTON, TEN (10) PIECES MINIMUM AT JOB SITE TO OWNER'S REPRESENTATIVE FOR FUTURE MAINTENANCE.

COMPLY WITH MANUFACTURER'S INSTRUCTIONS AND RECOMMENDATIONS.

PAINTING:
WORK INCLUDES SURFACES PREPARATION AND PAINTING OR FINISHING OF ALL INTERIOR SURFACES EXPOSED TO VIEW, THROUGHOUT THE PROJECT. WHERE ITEMS OR SURFACES ARE NOT SPECIFICALLY MENTIONED, PAINT THE SAME AS SIMILAR ADJACENT MATERIALS OR AREAS. THE WORK OF THIS SECTION INCLUDES, BUT IS NOT NECESSARILY LIMITED TO PAINTING OR FINISHING OF ALL INTERIOR DRYWALL SURFACES NOT FINISHED OTHERWISE.

A. MATERIALS:
PROVIDE PRODUCTS EQUAL TO MATERIALS LISTED IN THE FINISH SCHEDULE. NOTE THAT PROPRIETARY NAMES USED TO DESIGNATE COLORS (ON THE DRAWINGS) OR MATERIALS (SCHEDULED HEREIN) ARE NOT INTENDED TO IMPLY THAT PRODUCTS OF NAMED MANUFACTURER ARE REQUIRED TO EXCLUSION OF EQUIVALENT PRODUCTS OF OTHER MANUFACTURERS. PRIOR APPROVAL OF OWNERS REPRESENTATIVE REQUIRED.

B. SURFACE PREPARATION:
CLEAN SURFACES OF DIRT, RUST SCALE, GREASE, MOISTURE OR OTHER CONDITIONS OTHERWISE DETRIMENTAL TO FORMATION OF A DURABLE PAINT FILM. PERFORM PREPARATION AND CLEANING PROCEDURES IN ACCORDANCE WITH PAINT MANUFACTURER'S PRINTED INSTRUCTIONS FOR EACH PARTICULAR SUBSTRATE CONDITION.

GALVANIZED METAL: CLEAN ALL SURFACES THOROUGHLY WITH SOLVENT UNTIL THEY ARE COMPLETELY FREE FROM DIRT, OIL AND GREASE. ALLOW TO DRY THOROUGHLY BEFORE APPLICATION OF PAINT.

REMOVE HARDWARE, ACCESSORIES, PLATES, LIGHTING FIXTURES, AND SIMILAR ITEMS IN PLACE AND NOT TO BE FINISH PAINTED, OR PROVIDE SURFACED APPLIED PROTECTION PRIOR TO SURFACE PREPARATION AND PAINTING OPERATIONS. REMOVE, IF NECESSARY, FOR COMPLETION OF PAINTING OF EACH SPACE OR AREA, REINSTALL REMOVED ITEMS.

C. APPLICATION:
GENERAL: THE FINISHED SURFACE SHALL BE FREE FROM RUNS, SAGS, DROPS, RIDGES, WEAVES, LAPS, BRUSH MARKS AND VARIATIONS IN COLOR, TEXTURE AND FINISH.

COATING PROCESS: SUFFICIENT TIME SHALL ELAPSE BETWEEN SUCCESSIVE COATS TO PERMIT PROPER DRYING.

MIXING AND THINNING: AT TIME OF APPLICATION, PAINT SHALL SHOW NO SIGNS OF HARD SETTLING, EXCESSIVE SKINNING, LIVERING OR OTHER DETERIORATION. PAINT SHALL BE THOROUGHLY STIRRED, STRAINED AND KEPT AT A UNIFORM CONSISTENCY DURING APPLICATION.

STORAGE: THE PAINTER SHALL STORE ALL MATERIALS AND EQUIPMENT IN A ROOM ASSIGNED FOR THAT PURPOSE. PRECAUTIONS SHALL BE TAKEN TO REDUCE FIRE HAZARD AND THE ROOM SHALL BE KEPT CLEAN AND IN GOOD CONDITION.

CLEAN UP: SCHEDULE ALL CLEANING AND PAINTING SO THAT DUST AND OTHER CONTAMINANTS FROM THE CLEANING PROCESS WILL NOT FALL ON WET, NEWLY PAINTED SURFACES. DURING THE PROGRESS OF THE WORK, DO NOT ALLOW THE ACCUMULATION OF EMPTY CONTAINERS OR OTHER EXCESS ITEMS. REMOVE FROM SITE DISCARDED PAINT MATERIALS, RUBBISH, CANS AND RAGS AT END OF EACH WORK DAY. UPON COMPLETION OF PAINTING WORK, CLEAN WINDOW GLASS AND OTHER PAINT SPLATTERED SURFACES. REMOVE SPLATTERED PAINT AND REPAIR DEFACED PAINTED SURFACES AFTER COMPLETION OF WORK OF OTHER TRADES. IF OWNER DEEMS CLEAN-UP IS NOT SATISFACTORY, AND INDEPENDENT CLEANING SERVICE WILL BE BROUGHT IN, AT THE CONTRACTOR'S EXPENSE TO COMPLETE THE CLEAN-UP.

CONTRACTOR SHALL PROVIDE ONE (1) QUART OF UNOPENED PAINT, STAIN AND SEALER OF EACH COLOR AND TYPE USED IN LABELED, COVERED CANS FOR THE OWNER. PLACE IN CARTONS FOR STORAGE.

SEE PAINT SCHEDULE, SHEET G-005. FINAL FINISH IS SUBJECT TO APPROVAL BY OWNER, IF FINISH IS DEEMED UNSATISFACTORY, ANOTHER APPLICATION WILL BE REQUIRED AT THE CONTRACTORS EXPENSE. PROVIDE PAINT AND COATINGS AS LISTED BELOW:

5. EXTERIOR PAINTING

A. METAL
ONE COAT PRIMER
TWO COATS PER SCHEDULE
(NOTE: PRIMER MAY BE ELIMINATED IF ITEM IS FACTORY PRIMED)

B. CEMENT PLASTER:
ONE COAT PRIMER
TWO COATS PER SCHEDULE

C. CONCRETE MASONRY (EXPOSED):
ONE COAT SEALER
TWO COATS MASONRY PAINT PER SCHEDULE

D. SAW-TEXTURED WOOD SURFACE:
ONE COAT STAIN PER SCHEDULE

E. TRASH ENCLOSURE (INSIDE)
ONE COAT CONCRETE BLOCK FILLER
TWO COATS VINYL-ACRYLIC PAINT, COLOR TO MATCH BUILDING

6. INTERIOR PAINTING

A. METAL
ONE COAT PRIMER
TWO COATS PER SCHEDULE
(NOTE: PRIMER MAY BE ELIMINATED IF ITEM IS FACTORY PRIMED)

B. WOOD DOORS (PAINTED):
ONE COAT INTERIOR TRIM PRIMER
TWO COATS PER SCHEDULE

C. SMOOTH FINISH GYPSUM BOARD WALL AND CEILINGS
(GLOSS OR EGGSHELL):
ONE COAT WALL PRIMER
TWO COATS PER SCHEDULE

D. OAK TRIM (SMOOTH WOOD) "LACQUERED"
ONE COAT LACQUER SANDING SEALER
TWO COATS SEMI-GLOSS LACQUER

E. INSIDE THROATS OF AIR CONDITIONING SUPPLY AND RETURN
DUCTS IN PUBLIC AREAS
SPRAY BLACK TO A POINT OUT OF VIEW

7. GENERAL FINISH NOTES

ALL TILE DIMENSIONS ARE DESIGNED TO LAY OUT IN AN EQUAL MANNER. IF TILE MUST BE CUT, THE GROUT LINES SHALL ALIGN WITH ADJACENT TILES OR BE CENTERED AND CUT IN AN OBVIOUS LOCATION. G.C. SHALL COORDINATE THE INSTALLATION OF GYP. BD. WITH TILE DIMENSIONS TO PERMIT EVEN INSTALLATION.

ALL SURFACES TO RECEIVE PAINT FINISH SHALL BE PREPARED TO SHOW NO DEFECTS.
A. APPLY ONE (1) COAT PRIMER-SEALER
B. APPLY TWO (2) COATS FINISH. NO STIPPLE FINISH ON ALL PAINTED SURFACES.
SEE SCHEDULE ON PLANS FOR COLOR AND TYPE.

ALL INTERIOR GYP. BD. TO RECEIVE PAINT FINISH SHALL BE TAPED, SEALED AND SANDED TO RECEIVE FINISH. GYP. BD. UNDER FRP OR S.S. SHALL ONLY BE FIRE TAPED AND SANDED. ALL INTERIOR GYP. BD. TO BE TRUE AND LEVEL.

GYP. BD. SHALL EXTEND AT MINIMUM OF 6" ABOVE LAY-IN CEILING OR UP TO TYP. BD. CEILING. GYP. BD. ON DEMISING WALLS SHALL EXTEND TO THE STRUCTURE ABOVE UNLESS OTHERWISE NOTED.

ALL FLOORS SHALL BE SMOOTH AND LEVEL WITHOUT DEPRESSED OR RAISED AREAS, EXCEPT PROVISION SHALL BE MADE TO HAVE SMOOTH, EVEN SLOPE TO FLOOR DRAINS. THE SURFACE SHALL BE ACCEPTABLE TO RECEIVE FINISH.

VERIFY AND COORDINATE THE LOCATION OF ALL WALL OR CEILING ACCESS PANELS WITH THE OWNER'S PROJECT MANAGER.

PROVIDE METAL CORNER BEAD, TRIM AND CASING FOR ALL EDGES AND CORNERS OF GYP. BD. SURFACES ON PAINTED WALLS. CLEAN GYP. BD. CORNERS WITHOUT METAL CORNER BEADS SHALL BE UNDER FRP, TILE, OR S.S.

PROVIDE STIFFENERS, BRACING, BACK-UP PLATES, ETC. AS REQUIRED AT STUD WALLS FOR SUPPORT OF FIXTURES AND OTHER EQUIPMENT.

ALL EXISTING SURFACES SHALL BE INSPECTED AND ALL NECESSARY PREPARATORY WORK SHALL BE DONE IN ORDER TO RECEIVE NEW FINISHES.

BEFORE PAINTING OR FINISHING WORK IS TO BEGIN, ARRANGEMENTS SHALL BE MADE FOR PROPER VENTILATION AND LIGHTING IN ALL AREAS.

ALL FLOOR MATERIAL CHANGES SHALL OCCUR AT DOOR CENTERLINE UNLESS OTHERWISE NOTED.

FLOOR MATERIALS SPECIFIED ON THE FINISH SCHEDULE SHALL EXTEND UNDER ALL EQUIPMENT AND COUNTER AREAS.

FLOOR CONTRACTOR SHALL SUBMIT TO OWNER THREE COPIES OF MANUFACTURER'S MAINTENANCE MANUALS FOR THE FLOOR MATERIAL INSTALLED.

ALL TILE SHALL BE INSTALLED IN ACCORDANCE WITH THE RECOMMENDATIONS CONTAINED IN THE HANDBOOK FOR CERAMIC TILE INSTALLATION OF THE TILE COUNCIL OF AMERICA (CURRENT EDITION).

ALL INTERIOR FINISHES SHALL COMPLY WITH APPLICABLE LOCAL CODES AND REGULATIONS.

EACH SUBCONTRACTOR SHALL BE RESPONSIBLE TO VERIFY ADEQUATE SURFACE CONDITIONS THAT EXIST FOR THEIR WORK. IF ADEQUATE SURFACE CONDITIONS DO NOT EXIST THE SUBCONTRACTOR SHALL NOT PERFORM THEIR WORK UNTIL THE CONDITION IS CORRECTED.

CONTRACTOR TO FIELD VERIFY EXISTING CONDITIONS AND DIMENSIONS.

BID SET (2020/05/28) NOT FOR CONSTRUCTION

PANDA EXPRESS CHINESE KITCHEN

PANDA RESTAURANT GROUP INC.
1683 Walnut Grove Ave.
Rosemead, California
91770
Telephone: 626.799.9898
Facsimile: 626.372.8288

All ideas, designs, arrangement and plans indicated or represented by this drawing are the property of Panda Express Inc. and were created for use on this specific project. None of these ideas, designs, arrangements or plans may be used by or disclosed to any person, firm, or corporation without the written permission of Panda Express Inc.

REVISIONS:

ISSUE DATE:

1	35% SUBMITTAL	04/24/2020
2	95% SUBMITTAL	05/30/2020

DRAWN BY: STAFF

PANDA PROJECT #: D7432
ARCH PROJECT #:

GARY WANG & ASSOCIATES, INC.
1000 Corporate Center Dr., Ste. 550
Monterey Park, CA 91754
TEL: (626) 288-6898 FAX: (626) 768-7101
http://www.garywang.com

LICENSED ARCHITECT
GARY H. WANG
No. C-32569
REN. 04-30-21
STATE OF CALIFORNIA
05/30/2020

PANDA EXPRESS

MINI-MALL - SPACE 115
INGERSOLL STREET
FT BENNING, GA

G-002

SPECIFICATIONS

DIVISION 10 - SPECIALTIES

1. PORTABLE FIRE EXTINGUISHERS

PROVIDE GLASS ABC, 10 LB. DRY CHEMICAL OR AS REQUIRED BY FIRE CODES. MINIMUM ON E FURNISHED BY G.C. AT START OF CONSTRUCTION.

2. WALL VENT

GALVANIZED STEEL FRAME AND 45 DEG. BLADES, INSECT SCREEN, PRIME COATED. SEE DRAWINGS FOR SIZE.

3. SOFFIT VENT

FRY REGLET "CLEAR FINISH EIFS SOFFIT VENT" 3" W X 7/2"D.

4. TOILET ROOM ACCESSORIES

NOT USED

DIVISION 11 - EQUIPMENT

1. FOOD SERVICE EQUIPMENT

THE GENERAL CONTRACTOR SHALL BE RESPONSIBLE FOR COORDINATION OF THIS WORK AND FOR ASSEMBLIES AND HOOK-UP OF FOOD SERVICE EQUIPMENT PROVIDED BY OTHERS. SUCH AS, BUT NOT LIMITED TO, WALK-IN COOLER, WALK-IN FREEZER AND COMPLETE HOT WELLS SERVICE COUNTER ASSEMBLIES.

2. RELATED WORK DESCRIBED ELSEWHERE

THE GENERAL CONTRACTOR SHALL BE RESPONSIBLE FOR WORK OF SECTION "PLUMBING" INCLUDES SETTING OF FAUCETS AND CONNECTIONS TO SERVICES, INTERCONNECTIONS OF EQUIPMENT, FLOOR DRAINS IN THE VICINITY OF INDIRECT DRAIN OUTLETS, FAUCETS AND TRIM.

THE GENERAL CONTRACTOR SHALL BE RESPONSIBLE FOR ELECTRIC WORK INCLUDES ALL LINE SWITCHES, SAFETY CUT-OUTS, CONTROL PANELS, FUSE BOXES AND OTHER CONTROLS, ELECTRICAL RECEPTACLES, FITTINGS AND CONNECTIONS, EXCEPT AS OTHERWISE SPECIFIED IN SECTION "ELECTRICAL". ELECTRICAL CONTRACTOR SHALL MAKE FINAL CONNECTIONS TO BUILDING FROM ALL JUNCTION BOXES.

3. AS-BUILT DRAWINGS

GENERAL CONTRACTOR SHALL KEEP AN ACCURATE DIMENSIONED RECORD ON REPRODUCIBLE TRANSPARENCIES OF AS-BUILT LOCATIONS, AND OF WORK WHICH IS INSTALLED DIFFERENTLY FROM THAT SHOWN.

4. LOCATIONS AND ACCESSIBILITY

CONTRACTOR SHALL FULLY INFORM HIMSELF REGARDING PECULIARITIES AND LIMITATIONS OF SPACES AVAILABLE FOR INSTALLATION OF WORK AND MATERIALS FURNISHED AND INSTALLED UNDER THIS DIVISION. DRAWINGS INDICATE LOCATION AND ARRANGEMENT OF CONDUIT, EQUIPMENT AND OTHER ITEMS AND ARE TO BE FOLLOWED AS CLOSELY AS POSSIBLE. WORK SPECIFIED AND NOT CLEARLY DEFINED BY DRAWINGS SHALL BE INSTALLED AND ARRANGED IN A MANNER SATISFACTORY TO PANDA PM. IN EVENT CHANGES IN INDICATED LOCATIONS AND ARRANGEMENTS ARE DEEMED NECESSARY BY PANDA PM, THEY SHALL BE MADE BY THE CONTRACTOR WITHOUT ADDITIONAL CHARGES PROVIDED THAT THE CHANGES ARE ORDERED BEFORE THE WORK IS INSTALLED AND NO EXTRA MATERIALS OR LABOR ARE REQUIRED.

5. CLEANING OF EQUIPMENT, MATERIALS AND PREMISES

CLEAN EQUIPMENT AND MATERIALS THOROUGHLY . LEAVE SURFACES TO BE PAINTED SMOOTH AND CLEAN, READY FOR PAINTERS. CLEAN ENTIRE PREMISES OF UNUSED MATERIALS, RUBBISH, DEBRIS AND DIRT CREATED BY WORK UNDER THIS DIVISION.

6. OPERATION AND MAINTENANCE INSTRUCTIONS

FULLY INSTRUCT AND DEMONSTRATE TO THE OWNER'S OPERATING PERSONNEL THE PERFORMANCE, OPERATION AND MAINTENANCE OF EQUIPMENT. THE TIME ALLOWED FOR SAID INSTRUCTION SHALL BE ALLOWED FOR EACH CONTRACTOR AS PART OF THESE CONTRACT DOCUMENTS.

7. TESTING AND ADJUSTMENT

UPON COMPLETION OF ELECTRICAL WORK, ADJUST AND TEST CIRCUITS, OUTLETS, SWITCHES, LIGHTS, MOTORS AND TIME CLOCKS TO INSURE PROPER OPERATION OF ELECTRICAL EQUIPMENT. CHECK SERVICE VOLTAGES UNDER MAXIMUM LOAD. ITEMS, FIXTURES AND PARTS IN NEED OF CORRECTION AND DISCOVERED DURING SUCH TESTING SHALL BE IMMEDIATELY REPAIRED OR REPLACED WITH NEW EQUIPMENT, AND THAT PART OF THE SYSTEM SHALL BE RETESTED. SUCH REPLACEMENT OR REPAIR SHALL BE DONE AT NO ADDITIONAL COST TO THE OWNER.

DIVISION 12 - FURNISHINGS

NOT USED

DIVISION 13 -SPECIAL CONSTRUCTION

NOT USED

DIVISION 14 - CONVEYING SYSTEM

NOT USED

DIVISION 15 - MECHANICAL

REFER TO MECHANICAL AND PLUMBING DRAWINGS FOR SPECIFICATIONS

DIVISION 16 - ELECTRICAL

REFER TO ELECTRICAL DRAWINGS FOR ELECTRICAL SPECIFICATIONS

FIRE PREVENTION NOTES

1. ALL WORK SHALL COMPLY WITH THE VERSION OF THE INTERNATIONAL FIRE CODE AS AMENDED AND ADOPTED BY THE LOCAL AGENCIES HAVING AUTHORITY.

2. THE CONTRACTOR SHALL PROVIDE FIRE EXTINGUISHERS (NUMBER AND TYPE) AS SHOWN ON THE DRAWINGS AND REQUIRED BY LOCAL JURISDICTIONS. COORDINATE EXACT LOCATIONS WITH PANDA EXPRESS'S REPRESENTATIVE.

3. PROVIDE ONE PORTABLE FIRE EXTINGUISHER WHICH HAS A CLASSIFICATION OF NOT LESS THAN K TYPE FOR KITCHEN (U.F.C. SEC. 10.303) LOCATION TO BE APPROVED BY THE LOCAL AUTHORITIES PRIOR TO INSTALLATION.

4. PENETRATIONS OF RATED WALLS SHALL BE PROTECTED BY ASSEMBLIES OF APPROPRIATE RATING, INCLUDING DOORS, DUCTS, ETC. ALL REQUIRED FIRE DAMPER ASSEMBLIES INCLUDING SLEEVES AND INSTALLATION PROCEDURES SHALL BE APPROVED BY THE BUILDING DEPARTMENT INSPECTOR PRIOR TO INSTALLATION.

5. ALL AIR–HANDLING CUT–OFF AND SMOKE–DETECTED FIRE DAMPING EQUIPMENT REQUIRED BY THE LOCAL AGENCIES HAVING AUTHORITY SHALL BE PROVIDED AND INSTALLED BY THE MECHANICAL CONTRACTOR.

6. WHERE REQUIRED, FLAME SPREAD RATINGS OF MATERIAL USED IN THE CONSTRUCTION WILL BE SUPPLIED TO THE FIRE DEPARTMENT BY THE CONTRACTOR ORDERING THE MATERIALS.

7. ILLUMINATED EXIT SIGNS WITH BATTERY PACKS AND AUDIBLE SIGNALS SHALL BE PROVIDED AS SHOWN ON THE DRAWINGS AND AS REQUIRED BY CODE.

8. IF REQUIRED, COORDINATE FIRE SPRINKLER SYSTEM REQUIREMENTS WITH LOCAL AUTHORITIES. INSTALLATION SHALL COMPLY WITH NFPA 13. FIRE SPRINKLER PROTECTION SHALL BE PROVIDED ABOVE AND INSIDE WALK–IN COOLER AND FREEZERS.

9. INTERIOR FINISH SHALL COMPLY WITH ALL APPLICABLE CODES.

10. PROVIDE AN APPROVED AUTOMATIC FIRE EXTINGUISHING SYSTEM IN THE COOKING EXHAUST HOOD.

11. ALL DECORATIVE MATERIALS SHALL BE MAINTAINED IN A FLAME–RETARDANT CONDITION.

12. DUCTS SERVING A COOKING EXHAUST HOOD SHALL BE ENCLOSED IN A FIRE RATED ENCLOSURE (SEE MECHANICAL DRAWINGS FOR REQUIREMENT).

13. BUILDING NUMBERS SHALL BE EASILY VISIBLE AND LEGIBLE FROM THE STREET OR ROAD FRONTING THE PROPERTY.

14. THE CONSTRUCTION, REMODEL, OR DEMOLITION OF A BUILDING SHALL COMPLY WITH ALL APPLICABLE CODES.

15. PROVIDE OCCUPANT LOAD SIGN COMPLYING WITH CODE.

16. EXIT DOORS SHALL HAVE PANIC HARDWARE AND SHALL SWING IN THE DIRECTION OF EXIT TRAVEL WHEN SERVING ANY HAZARDOUS AREAS, OR ANY OTHER OCCUPANCY SERVING AN OCCUPANT LOAD OF 50 OR MORE.

PANDA RESTAURANT GROUP INC.
1683 Walnut Grove Ave.
Rosemead, California
91770
Telephone: 626.799.9898
Facsimile: 626.372.8288

All ideas, designs, arrangement and plans indicated or represented by this drawing are the property of Panda Express Inc. and were created for use on this specific project. None of these ideas, designs, arrangements or plans may be used by or disclosed to any person, firm, or corporation without the written permission of Panda Express Inc.

REVISIONS:

ISSUE DATE:

1	35% SUBMITTAL	04/24/2020
2	95% SUBMITTAL	05/30/2020

DRAWN BY: STAFF

PANDA PROJECT #: D7432
ARCH PROJECT #:

GARY WANG
& ASSOCIATES, INC.
1000 Corporate Center Dr., Ste. 550
Monterey Park, CA 91754
TEL: (626) 288-6898 FAX: (626) 768-7101
http://www.garywang.com

LICENSED ARCHITECT
GARY H. WANG
No. C-32569
REN. 04-30-21
STATE OF CALIFORNIA
05/30/2020

BID SET (2020/05/28) NOT FOR CONSTRUCTION

PANDA EXPRESS

MINI-MALL - SPACE 115
INGERSOLL STREET
FT BENNING, GA

G-003

SPECIFICATIONS

DEMO NUMBERED NOTES:

1. EXISTING DEMISING WALL TO REMAIN.
2. DEMO EXISTING INTERIOR NON-BEARING PARTITION WALLS.
3. DEMO EXISTING STOREFRONT AND DOOR.
4. DEMO EXISTING CEILING AND EXISTING CEILING LIGHTS.
5. DEMO EXISTING FLOOR FINISHES.
6. DEMO AND CAP EXISTING FLOOR SINKS, FLOOR DRAINS THAT ARE TO BE ABANDONED.
7. EXISTING COLUMN TO REMAIN. GC TO PROTECT IN PLACE.

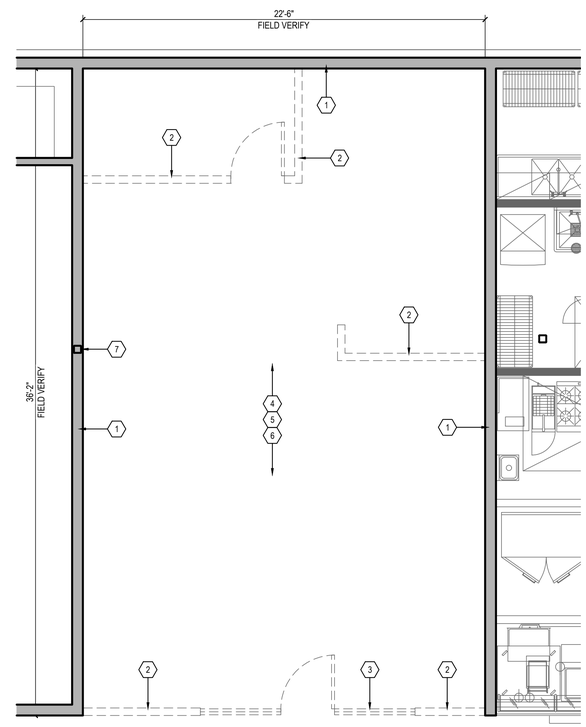

NOT USED | 2
D-100

DEMO PLAN | 1
Scale: 1/4" = 1'-0" | D-100

BID SET (2020/05/28) NOT FOR CONSTRUCTION

PANDA RESTAURANT GROUP INC.
1683 Walnut Grove Ave.
Rosemead, California
91770
Telephone: 626.799.9898
Facsimile: 626.372.8288

All ideas, designs, arrangement and plans indicated or represented by this drawing are the property of Panda Express Inc. and were created for use on this specific project. None of these ideas, designs, arrangements or plans may be used by or disclosed to any person, firm, or corporation without the written permission of Panda Express Inc.

REVISIONS:

ISSUE DATE:

1	35% SUBMITTAL	04/24/2020
2	95% SUBMITTAL	05/30/2020

DRAWN BY: STAFF

PANDA PROJECT #: D7432
ARCH PROJECT #:

GARY WANG
& ASSOCIATES, INC.
1000 Corporate Center Dr., Ste. 550
Monterey Park, CA 91754
TEL: (626) 288-6898 FAX: (626) 768-7101
http://www.garywang.com

05/22/2020

PANDA EXPRESS

MINI-MALL - SPACE 115
INGERSOLL STREET
FT BENNING, GA

D-100

DEMO PLAN

EQUIPMENT SCHEDULE

PLUMBING
- FS INDIRECT CONNECTION TO FLOOR SINK
- D DIRECT CONNECTION
- RIH ROUGH IN HEIGHT (TO CENTER OF CONNECTION)

ELECTRICAL
- D DIRECT CONNECTION
- C CONVENIENT OUTLET
- FSO FLOOR STUB OUT
- DC DROPPED CORD

DESCRIPTION
- P PANDA EXPRESS VENDOR
- GC GENERAL CONTRACTOR
- EC ELECTRICAL CONTRACTOR
- KEC KITCHEN EQUIPMENT COMPANY
- S SERVING AREA
- K KITCHEN
- (E) EXISTING
- (L) LICENSEE

INSTALL BY	SUPPLY BY	GAS			WASTE		COLD WATER		HOT WATER		CONNECTION		LOAD	PHASE	H.P.	VOLTS	REMARKS	DIMENSIONS	MANUFACTURER	MODEL #	EQUIPMENT	NO.
		K BTU	R.I.H.	SIZE	TYPE	SIZE	R.I.H.	SIZE	R.I.H.	SIZE	R.I.H.	TYPE	WATT					W x D x H (ø x H)				
SERVING AREA EQUIPMENT																						
G.C.	P																SEE DETAIL	SEE PLAN	KEC	CUSTOM	HOT WELLS COUNTER, SERVICE	1B
G.C.	P																SEE DETAIL	SEE PLAN	KEC	CUSTOM	SNEEZE GUARD	1S2
G.C.	P										REF. ELEC.	D	840W	1		120	3 HEATING ELEMENTS	43.06" X 5.25" X 3.03"	KEC		43" RADIANT TOP HEATER	1S2b1
G.C.	P											D	1100W	1		120	4 HEATING ELEMENTS	55.56" X 5.25" X 3.03"	KEC		56" RADIANT TOP HEATER (2)	1S2b2
G.C.	P											D	15A	1		120	SEE DETAIL	SEE PLAN	KEC	CUSTOM	CASHIER & BEVERAGE. COUNTER	2Q
G.C.	P											C	650W	1		120	INDUCTION DRY WELL	15 3/4" DIA X 11"D	IO CONTROLS	IDW650L	INDUCTION WELL - 17QT	3F
G.C.	P											C	650W	1		120	INDUCTION DRY WELL	12 1/2" DIA X 11"D	IO CONTROLS	IDW650S	INDUCTION WELL - 11QT	3G
G.C.	L											C		1	1/4	120			TRUE		COKE REFRIGERATOR	12B
KITCHEN EQUIPMENT																						
G.C.	P	450	10"	1-1/2"	FS	2"	10"	1/2"									SEE DETAIL	93"x42"	KEC	CUSTOM	124" CHINESE RANGE	20
G.C.	P	122 EA.	14"	1 1/2"							24"	C	–	1		120		47"x31-1/2"x51-5/8"	FRYMASTER	FMJ350-PE	FRYER	21A
G.C.	GRILL NEMA PLUG/CONNECTOR P										36"	DC	25A	3		208V		36"X27 7/8"X15 1/2"	STAR	536TGF	STAR ELECTRICAL GRILL	23B
G.C.	P										24"	C	14.8A	1		120	NEMA 5	19.9"X34.5"X41.3"	WINSTON	HA4005	RICE HOLDING CABINET	24Hr
G.C.	P	34.6	10" & 30"	3/4"														19"øx17"	RINNAI	RER-55AS	RICE COOKER	25A
G.C.	P										24"	C	12A	1	1/2	115	NEMA 5-15P	48"X30"X29 3/4"	RANDELL	65348-290	48" WORKTOP FREEZER	30J
G.C.	P				FS	3/4"					130"	D	500W	1	1.5	120/208		SEE PLAN	GRE	CUSTOM	WALK-IN COOLER UNIT	31M
G.C.	P											D	10.0A	1	1.5	208		SEE PLAN	GRE	CUSTOM	WALK-IN COOLER COND.	31-S
G.C.	P				FS	3/4"					130"	D	500W	1	1.5	120/208		SEE PLAN	GRE	CUSTOM	WALK-IN FREEZER	32M
G.C.	P											D	10.0A	1	1.5	208		SEE PLAN	GRE	CUSTOM	WALK-IN FREEZER COND.	32-S1
G.C.	P											D/ID	500W	1		120		SEE PLAN	GRE	CUSTOM	W.I.F. LTG, DOOR HEATER	32-S7
G.C.	P										24"	C	12A	1	1/2	120	NEMA 5-15P	84"x33"x35"	RANDELL	9050K-7MP2-NSB	84" REF. PREP. TABLE	34OIn
G.C.	P										24"	C	5.5A	1	1/4	115	NEMA 5-15P	32"x33"x35"	RANDELL	9412-32-7MPL1-NSB	32" REF. PREP. TABLE	34Hn
G.C.	P				FS	2"	14"	3/4"	14"	3/4"								100"X30"	KEC	CUSTOM-(PS-100L)	POT SINK	40A
G.C.	P				FS	2"	14"	3/4"	14"	3/4"							1 COMPARTMENT	42"x30"	KEC	CUSTOM-(VS-42)	42" VEGETABLE SINK (R)	41B
G.C.	P				FS	2"	14"	3/4"	14"	3/4"							1 COMPARTMENT	42"x30"	KEC	CUSTOM-(VS-42)	42" VEGETABLE SINK (L)	41C
G.C.	P										18GA POLISHED (WALL MTD. @ 59" A.F.F.)							SEE PLAN	KEC	CUSTOM (NSF)	12"D S.S. WALL MTD. SHELF	43A
G.C.	L										18GA POLISHED (WALL MTD. @ 71" A.F.F.)							SEE PLAN	KEC	CUSTOM (NSF)	16"D S.S. WALL MTD. SHELF	43B
G.C.	L										4 SHELVES MTD. @ 8" A.F.F., 26" A.F.F., 54" A.F.F., 72" A.F.F.							SEE PLAN	GOLD BOND	ISS	18"D WIRE SHELVES	44A
G.C.	L										4 SHELVES MTD. @ 36" A.F.F., 48" A.F.F., 60" A.F.F., 72" A.F.F.							SEE PLAN	GOLD BOND	ISS	24"D WIRE SHELVES	44C
G.C.	P																	24"x 30" x 24"	KEC	CUSTOM	S.S. RICE COOKER STAND	46A
G.C.	P																	36 1/2"x 33" x 28"	KEC	CUSTOM	S.S. GRILL STAND	46K
G.C.	P																		KEC	CUSTOM	S.S. RICE WARMER STAND	46B
G.C.	P										50"	C	2.8A	1	1/3	120		12 1/2"x21"	PIPER	GSM-4	FOOD PROCESSOR	53B
SMALL EQUIPMENT																						
G.C.	P					2"	24"	1/2"	24"	1/2"							W/TOWEL & SOAP	14 1/4"x18 1/2"	GSW	HS-1615NPASS	HAND SINK	45A
G.C.	P										24"	C	105W	1		120	ON S.S. COUNTER	17" ø	WELBON	WRS-1088BS	RICE WARMER	54A
G.C.	P										84"	DC	1800W	1		208	PLUG: NEMA 6-15R	17 1/2"X13 5/8"X22 9/16"	SHARP	R-CD1800M	MICROWAVE	55A
G.C.	G.C.																AS REQUIRED BY LOCAL FIRE DEPT., CHECK LOCATION WITH PROJECT MANAGER				FIRE EXTINGUISHER	56
G.C.	L																	SEE DETAIL	SAN-JAMAR	SANJT7500TBK	PAPER TOWEL DISPENSER	60D
G.C.	L																WALL MOUNT	12"x15"x78"	GRE	5-TIER	LOCKER (2)	61B
POS EQUIPMENT																						
	L																SEE ELEV. ON E-200			CUSTOM	MANAGER STATION	49A
	L										REF ELEV	C	100W	1		120	SEE DETAIL			CUSTOM	COMPUTER	83A
	L										REF ELEV	C	50W	1		120	SEE PLAN				POS PRINTERS	86A
	L										REF ELEV	C	50W	1		120					FAX	87
	L										REF ELEV	C	500W	1		120	CUSTOM	11 1/4"x14 1/2"x9"	RESNOS	S 460	CASH REGISTER SYSTEM	94
MEP EQUIPMENT																						
G.C.	P																SEE MECH. DWG.	SEE PLAN	CAPTIVE AIR	CUSTOM	EXHAUST HOOD	M1
G.C.	P																SEE MECH. DWG.	SEE PLAN	CAPTIVE AIR	CUSTOM	HOOD CONTROL PANEL	M4
G.C.	P																SEE MECH. DWG	SEE PLAN	CAPTIVE AIR		FIRE SUPPRESSION SYSTEM	M5
G.C.	G.C.																SEE MECH/ELEC DWG	SEE PLAN			RECESSED ANSUL PULL BOX	M6
G.C.	G.C.					3"	36"	–	36"	–		D					FLOOR TYPE	24" X 24" X 13"	G.S.W. PHONE:1800-897-5999	SE2424FM	STAINLESS STEEL MOP SINK	P1
G.C.	L										48"	C	50W	1		120	SEE PLAN	15" X 13"	DELL (17" COLOR)		LCD MONITOR-MANAGER	94-2-16
																	SEE ELEC. DWG			EXISTING	ELECTRICAL PANEL	E7
SIGNAGE																						
G.C.	L										REF ELEV	C	130W	1		120	DEDICATED CIRCUIT	48.9" X 28.1" X 1.3"	LG	55WS50BS-B	LCD DISPLAY MONITOR	96-3A
P	P																			SEE SIGN BOOK	LOCK-UP LOGO	S1
P	P																			SEE SIGN BOOK	LETTER SET SIGNAGE	S2
FURNITURE																						
G.C.	G.C.																SEE PLAN		CUSTOM - QUARTZ	PALOMA WHITE	SERVICE COUNTER	F1d
MISC. STAINLESS STEEL																						
G.C.	P																				SANITIZER BUCKET SHELF	SS-01

EQUIPMENT SCHEDULE 2
A-101

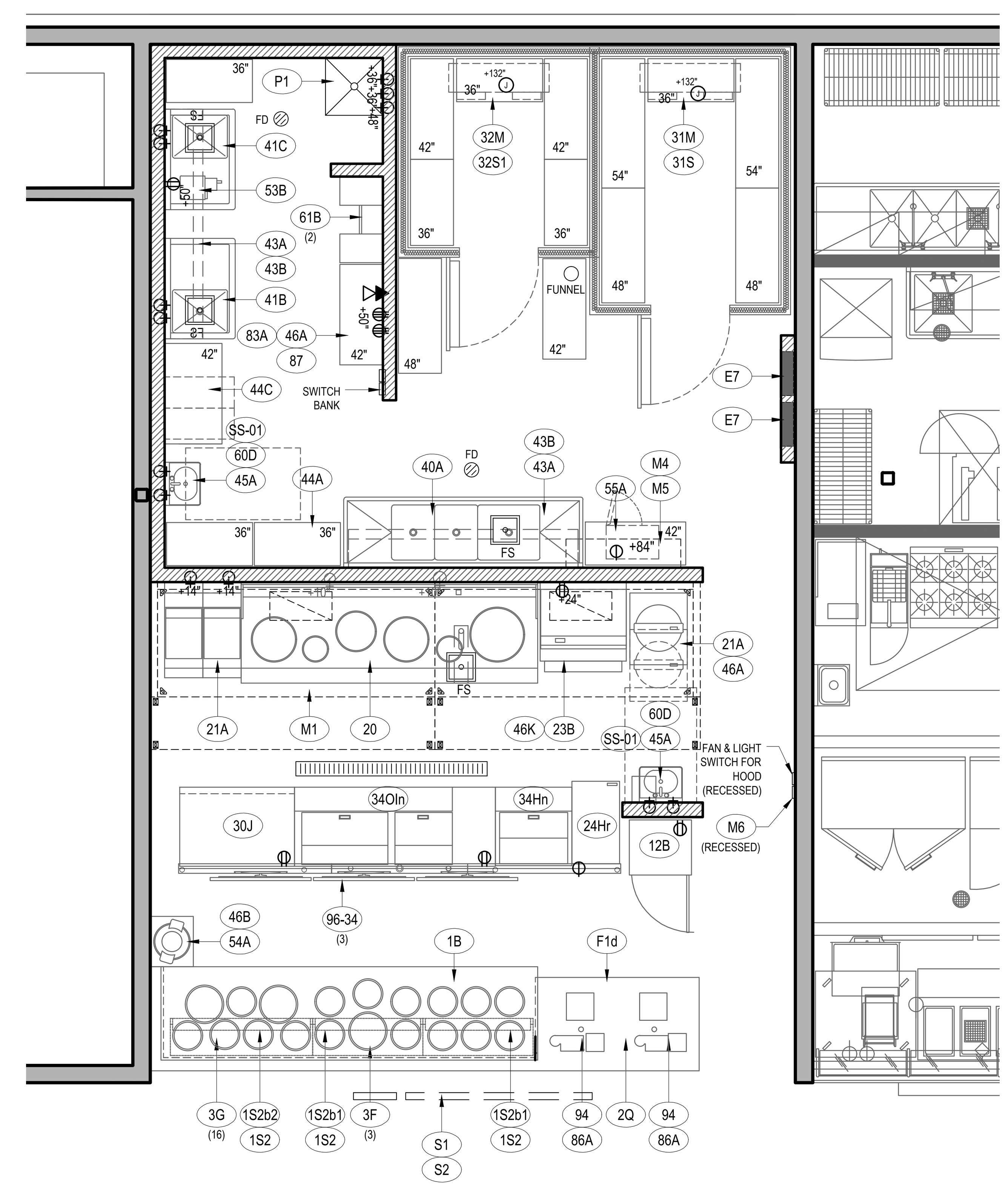

ADDITIONAL NOTES:
1. GC TO PROVIDE CLASS K AND ABC TYPE FIRE EXTINGUSHER.
2. EXTINGUISHERS TO BE INSTALLED IAW NFPA 10.

KITCHEN PLAN 1
Scale = 1/4" = 1'-0" A-101

BID SET (2020/05/28) NOT FOR CONSTRUCTION

PANDA RESTAURANT GROUP INC.
1683 Walnut Grove Ave.
Rosemead, California
91770
Telephone: 626.799.9898
Facsimile: 626.372.8288

All ideas, designs, arrangement and plans indicated or represented by this drawing are the property of Panda Express Inc. and were created for use on this specific project. None of these ideas, designs, arrangements or plans may be used by or disclosed to any person, firm, or corporation without the written permission of Panda Express Inc.

REVISIONS:

ISSUE DATE:

1	35% SUBMITTAL	04/24/2020
2	95% SUBMITTAL	05/30/2020

DRAWN BY: STAFF

PANDA PROJECT #: D7432
ARCH PROJECT #:

GARY WANG & ASSOCIATES, INC.
1000 Corporate Center Dr., Ste. 550
Monterey Park, CA 91754
TEL: (626) 288-6898 FAX: (626) 768-7101
http://www.garywang.com

LICENSED ARCHITECT GARY H. WANG No. C-32569 REN. 04-30-21 STATE OF CALIFORNIA
05/30/2020

PANDA EXPRESS
MINI-MALL - SPACE 115
INGERSOLL STREET
FT BENNING, GA

A-101

KITCHEN PLAN
EQUIPMENT SCHEDULES

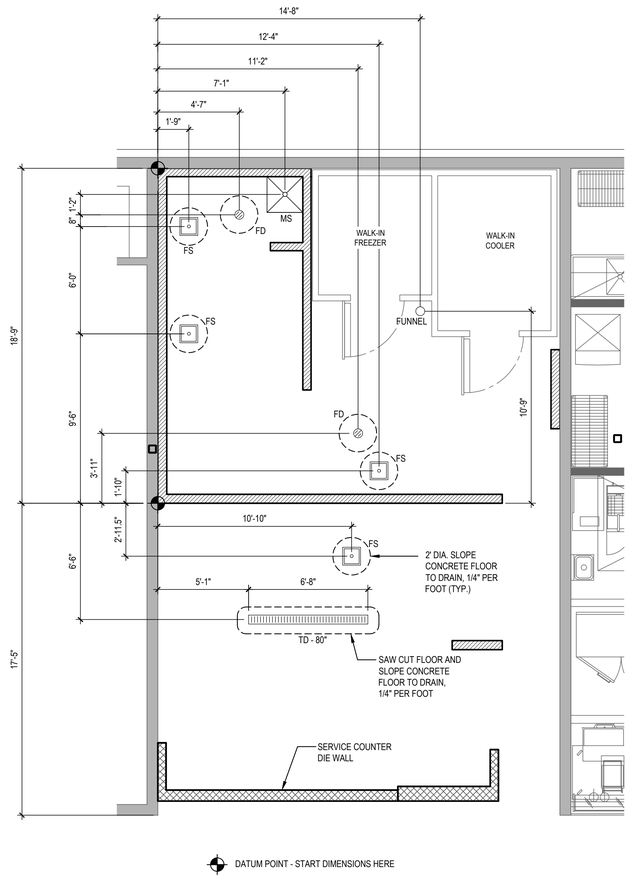

NOT USED | 2
NTS | A-102

FLOOR PENETRATION PLAN | 1
Scale: 1/4" = 1'-0" | A-102

PANDA EXPRESS CHINESE KITCHEN

PANDA RESTAURANT GROUP INC.
1683 Walnut Grove Ave.
Rosemead, California
91770
Telephone: 626.799.9898
Facsimile: 626.372.8288

All ideas, designs, arrangement and plans indicated or represented by this drawing are the property of Panda Express Inc. and were created for use on this specific project. None of these ideas, designs, arrangements or plans may be used by or disclosed to any person, firm, or corporation without the written permission of Panda Express Inc.

REVISIONS:

ISSUE DATE:

1	35% SUBMITTAL	04/24/2020
2	95% SUBMITTAL	05/30/2020

DRAWN BY: STAFF

PANDA PROJECT #: D7432
ARCH PROJECT #:

GARY WANG
& ASSOCIATES, INC.
1000 Corporate Center Dr., Ste. 550
Monterey Park, CA 91754
TEL: (626) 288-6898 FAX: (626) 768-7101
http://www.garywang.com

LICENSED ARCHITECT GARY H. WANG No. C-32569 REN. 04-30-21 STATE OF CALIFORNIA
05/30/2020

BID SET (2020/05/28) NOT FOR CONSTRUCTION

PANDA EXPRESS

MINI-MALL - SPACE 115
INGERSOLL STREET
FT BENNING, GA

A-102

FLOOR PENETRATION PLAN

MATERIAL SCHEDULE

INSTALLED AND FURNISHED BY. G.C. UNLESS NOTED OTHERWISE

NO	MANUFACTURER	DESCRIPTION	SPECIFICATION	REMARKS	FURNISHED BY:	INSTALLED BY:	CONTACT
WP1	CRANE COMPOSITES INC.	F.R.P. THICKNESS: .075	COLOR: #636 (LIGHT GRAY)		G.C.	G.C.	WADE WARFORD 425.260.3495
WP2		S.S. PANEL (22 GA)	FINISH: STRAIGHT BRUSHED FINISH	FURNISHED BY PX/ INSTALLED BY G.C.	G.C.	G.C.	
WP3		S.S. PANEL (22 GA)	FINISH: DIAMOND PATTERN FINISH	FURNISHED BY PX/ INSTALLED BY G.C.	G.C.	G.C.	
W102	WOLF GORDON	PRINT WALL COVERING	COLOR: RED BAMBOO	CUSTOM WALL COVERING AVAILABLE ONLY FROM P.X. VENDOR	G.C.	G.C.	CATHY DY 310.770.1165
QZ-7	CORIAN QUARTZ	COMPOSIT SOLID SURFACE	FINISH: POLISHED COLOR: LONDON SKY	SERVICE COUNTER TOP	G.C.	G.C.	
P-101	SHERWIN-WILLIAMS	PAINT	COLOR: SW 6252 ICE CUBE PROMAR 200, ZERO VOC, LATEX SEMI-GLOSS		G.C.	G.C.	
P-106	SHERWIN-WILLIAMS	PAINT	COLOR: SW 7020 BLACK FOX PROMAR 200, ZERO VOC, LATEX SEMI-GLOSS		G.C.	G.C.	
QT	DALTILE	QUARRY TILE	COLOR: ARID GRAY (0Q42) FINISH: PLAIN	GROUT MFR: MAPEI - 800.42.MAPEI- WWW.MAPEI.COM STYLE: LATEX MODIFIED GROUT #47 COLOR/FINISH: CHARCOAL/SANDED SIZE: 3/16"	G.C.	G.C.	
QT-1	DALTILE	QUARRY TILE	COLOR: ARID GRAY (0Q42) FINISH: ABRASIVE	GROUT MFR: MAPEI - 800.42.MAPEI- WWW.MAPEI.COM STYLE: LATEX MODIFIED GROUT #47 COLOR/FINISH: CHARCOAL/SANDED SIZE: 3/16"	G.C.	G.C.	
QT-2	DALTILE -COVE BASE	QUARRY TILE COVE BASE	COLOR: ARID GRAY (0Q42) FINISH: PLAIN	GROUT MFR: MAPEI - 800.42.MAPEI- WWW.MAPEI.COM STYLE: LATEX MODIFIED GROUT #47 COLOR/FINISH: CHARCOAL/SANDED SIZE: 3/16"	G.C.	G.C.	
T-96	DALTILE - ANCHORAGE	6"X12" COVE BASE S-36C9T	COLOR: BACK AC10 FINISH: UNPOLISHED	GROUT MFR: MAPEI - 800.42.MAPEI- WWW.MAPEI.COM STYLE: LATEX MODIFIED GROUT #47 COLOR/FINISH: CHARCOAL/SANDED SIZE: 1/8"	G.C.	G.C.	NATIONAL.ACCOUNTS@ DALTILE.COM PH: (877) 556-5728
T-110	DALTILE FOREST PARK	WALL TILE/ MIX OF: 9"X36" AND 6" X 36"	COLOR: TIMBERLAND FP97	GROUT MFR: MAPEI - 800.42.MAPEI- WWW.MAPEI.COM STYLE: LATEX MODIFIED GROUT #07 COLOR/FINISH: CHOCOLATE/ SANDED SIZE: 1/8"	G.C.	G.C.	NATIONAL.ACCOUNTS@ DALTILE.COM PH: (877) 556-5728
T-112	DALTILE NERO	SIZE: 12"X12"	COLOR: P406	GROUT MFR: CUSTOM BUILDING PRODUCTS STYLE: LATEX MODIFIED GROUT #370 COLOR/FINISH: DOVE GRAY"	G.C.	G.C.	NATIONAL.ACCOUNTS@ DALTILE.COM PH: (877) 556-5728
S2a	SCHULT IND	60" Ø HEAT-INFUSED FAMILY SEAL	COLOR: WHITE		G.C.	G.C.	JEFFREY SCHULT 1800.783.8998 EXT. 226 JSCHULT@SCHULT.COM

WALL SCHEDULE

INSTALLED AND FURNISHED BY. G.C. UNLESS NOTED OTHERWISE

NO.	DESCRIPTION
W1	EXISTING WALL TO REMAIN; G.C. TO APPLY NEW WALL FINISH (SEE INTERIOR ELEVATIONS)
	NOT USED
	NOT USED
W3	3 5/8" 20GA. METAL STUD WALL W/ 5/8" TYPE "X" GYP. BD. ON ONE SIDE
W4	3 5/8" 20GA. METAL STUD WALL W/ 5/8" TYPE "X" GYP. BD. ON BOTH SIDES
W5	6" 20GA. METAL STUD LOW WALL W/ 5/8" TYPE "X" GYP. BD. BOTH SIDES
W6	3 5/8" 20GA. METAL STUD LOW WALL W/ 5/8" TYPE "X" GYP. BD. ON BOTH SIDES
W7	3 5/8" 20GA. METAL STUD LOW WALL W/ 5/8" TYPE "X" GYP. BD. ON ONE SIDE
W8	6" 20GA. METAL STUD WALL W/ 5/8" TYPE "X" GYP. BD. AT ELECTRICAL PANEL

WALL LEGEND

- EXISTING WALL
- SERVICE COUNTER DIE WALL BY G.C.
- NEW INTERIOR PARTITION WALL 6" ABOVE CEILING BY G.C.

*ALL INTERIOR DIMENSIONS ARE FINISHED TO FINISHED

NOTE: THE FOLLOWING STAINLESS STEEL PROVIDED BY PX--INSTALLED BY G.C.:
1. PANEL DIVIDERS AT WP3
2. INSIDE CORNER AT WP3 TO WP2
3. FLASHING AT TOP OF BASE WP3
4. WP2 PIECE AT LENGTH OF WALL

NOTE: THE FOLLOWING STAINLESS STEEL PROVIDED BY G.C.-INSTALLED BY G.C.:
5. INSTALL 18 GA STAINLESS STEEL CORNER GUARD & WALL CAP INSIDE KITCHEN

CG-1 — 18 GA. STAINLESS STEEL CORNER GUARD

CG-2 — 18 GA. STAINLESS STEEL CORNER GUARD/FRAME - ALL AROUND PERIMETER OF OPENING - FRAME TO BE WELDED WITH MITERED CORNERS TO FORM SINGLE UNIT.

WC-1 — 18 GA. STAINLESS STEEL WALL CAP

ALL OTHER STAINLESS STEEL BY G.C.

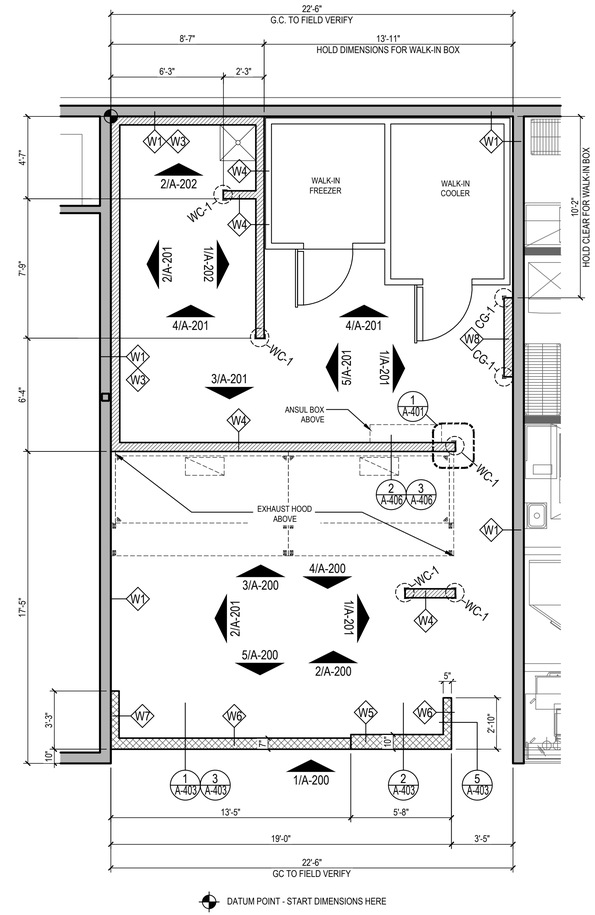

SCHEDULES/LEGEND/NOTES | 2
NTS | A-103

FLOOR PLAN | 1
Scale: 1/4" = 1'-0" | A-103

PANDA EXPRESS CHINESE KITCHEN

PANDA RESTAURANT GROUP INC.
1683 Walnut Grove Ave.
Rosemead, California
91770
Telephone: 626.799.9898
Facsimile: 626.372.8288

All ideas, designs, arrangement and plans indicated or represented by this drawing are the property of Panda Express Inc. and were created for use on this specific project. None of these ideas, designs, arrangements or plans may be used by or disclosed to any person, firm, or corporation without the written permission of Panda Express Inc.

REVISIONS:

ISSUE DATE:

1	35% SUBMITTAL	04/24/2020
2	95% SUBMITTAL	05/30/2020

DRAWN BY: STAFF

PANDA PROJECT #: D7432
ARCH PROJECT #:

GARY WANG & ASSOCIATES, INC.
1000 Corporate Center Dr., Ste. 550
Monterey Park, CA 91754
TEL: (626) 288-6898 FAX: (626) 768-7101
http://www.garywang.com

LICENSED ARCHITECT GARY H. WANG No. C-32569 REN. 04-30-21 STATE OF CALIFORNIA
05/30/2020

BID SET (2020/05/28) NOT FOR CONSTRUCTION

PANDA EXPRESS
MINI-MALL - SPACE 115
INGERSOLL STREET
FT BENNING, GA

A-103
FLOOR PLAN

FINISH SCHEDULE

NO.	MANUFACTURER	DESCRIPTION	SPECIFICATION	JOINT	REMARKS	GROUT	CONTACT
QT	DALTILE	QUARRY TILE	COLOR: ARID GRAY (0Q42) FINISH: PLAIN	3 / 16"	KITCHEN, SERVICE FLOOR	MFR: MAPEI - 800.42.MAPEI- WWW.MAPEI.COM STYLE: LATEX MODIFIED GROUT #47 COLOR/FINISH: CHARCOAL/SANDED	800.207.2967 EXT. 7263
QT-1	DALTILE	QUARRY TILE	COLOR: ARID GRAY (0Q42) FINISH: ABRASIVE	3 / 16"	KITCHEN, SERVICE FLOOR	MFR: MAPEI - 800.42.MAPEI- WWW.MAPEI.COM STYLE: LATEX MODIFIED GROUT #47 COLOR/FINISH: CHARCOAL/SANDED	800.207.2967 EXT. 7263
QT-2	DALTILE -COVE BASE	COVE BASE TILE	COLOR: ARID GRAY (0Q42) FINISH: PLAIN	3 / 16"	KITCHEN, SERVICE BASE	MFR: MAPEI - 800.42.MAPEI- WWW.MAPEI.COM STYLE: LATEX MODIFIED GROUT #47 COLOR/FINISH: CHARCOAL/SANDED	800.207.2967 EXT. 7263
TR100	SCHLUTER	BRUSHED NICKEL ANODIZED ALUMINUM	DILEX-AHK 1S 125 ATGB				
		OUTSIDE CORNER CONNECTION PIECE	DILEX-AHK-E90 / AHK 1S 125 ATGB				
		INSIDE CORNER CONNECTION PIECE	DILEX-AHK-190 / AHK 1S 125 ATGB				
		END CAP PIECE	DILEX-AHK-E / AHK 1S 125 ATGB				
TR101	SCHLUTER	GRAPHITE ANODIZED ALUMINUM	RONDEC-RO125 AGR				
		OUTSIDE CORNER CONNECTION PIECE	RONDEC-EV / RO125 AGR				
		INSIDE CORNER CONNECTION PIECE	RONDEC-12L / RO125 AGR				
TR102	SCHLUTER	SATIN ANODIZED ALUMINUM	SCHIENE-AE125				
T-200	CMC BRAVADA	SIZE: 24"X24"	COLOR: GREIGE			MFR: MAPEI - 800.42.MAPEI- WWW.MAPEI.COM STYLE: LATEX MODIFIED GROUT #11 COLOR/FINISH: SAHARA BEIGE/ SANDED SIZE: 1/4"	CMC DOUG SALATINO PH: (518) 713-5371

* SCHLUTER SYSTEM ALUMINUM TRIM:

COVE TILE TRIM: SERVICE COUNTER

SCHLUTER SYSTEMS DILEX-AHK 1S 125 ATGB (BRUSHED NICKEL ANODIZED ALUMINUM)

TR100
- -OUTSIDE CORNER CONNECTOR PIECE: DILEX-AHK-E90/AHK 1S 125 ATGB (BRUSHED NICKEL ANODIZED ALUMINUM)
- -INSIDE CORNER CONNECTOR PIECE: DILEX-AHK-I90/AHK 1S 125 ATGB (BRUSHED NICKEL ANODIZED ALUMINUM)
- -END CAP PIECE: DILEX-AHK-E/AHK 1S 125 ATGB (BRUSHED NICKEL ANODIZED ALUMINUM)

EDGE TILE TRIM:

SCHLUTER SYSTEMS RONDEC-RO125 ATGB (BRUSHED NICKEL ANODIZED ALUMINUM)

TR101
- -OUTSIDE CORNER CONNECTOR PIECE: RONDEC-EV/RO125 ATGB (BRUSHED NICKEL ANODIZED ALUMINUM)
- -INSIDE CORNER CONNECTOR PIECE: RONDEC-I2L/RO125 ATGB (BRUSHED NICKEL ANODIZED ALUMINUM)

* EPOXY GROUT BY MAPEI, KERAPOXY IEG, 100% SOLIDS INDUSTRIAL GRADE:
AREAS: UNDER HOOD AND 36 " IN FRONT OF COOKING LINE, 3 COMPARTMENT SINK AND MOP SINK AREA

SEE MANUFACTURER'S SPECIFICATION, DETAILS AND GUIDE FOR PREPARATION, MIXING, GROUTING AND CLEANING INSTRUCTION

NOTE: SEE INTERIOR SHEETS FOR WALL/ BASE TILE LOCATIONS AND SPECIFICATIONS

FLOOR FINISH LEGEND:

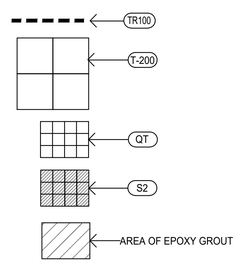

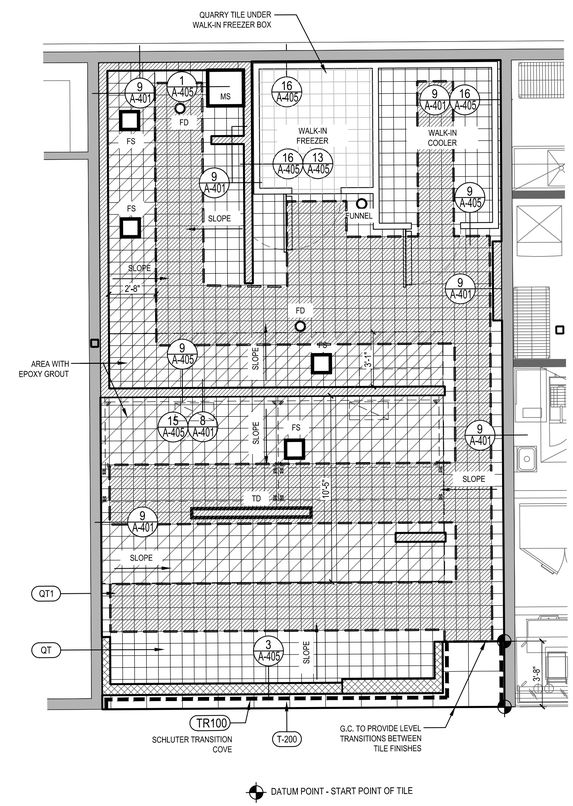

FINISH SCHEDULE | 4
NTS | A-104

FLOOR FINISH PLAN | 1
Scale: 1/4" = 1'-0" | A-104

PANDA RESTAURANT GROUP INC.
1683 Walnut Grove Ave.
Rosemead, California
91770
Telephone: 626.799.9898
Facsimile: 626.372.8288

All ideas, designs, arrangement and plans indicated or represented by this drawing are the property of Panda Express Inc. and were created for use on this specific project. None of these ideas, designs, arrangements or plans may be used by or disclosed to any person, firm, or corporation without the written permission of Panda Express Inc.

REVISIONS:

ISSUE DATE:

1	35% SUBMITTAL	04/24/2020
2	95% SUBMITTAL	05/30/2020

DRAWN BY: STAFF

PANDA PROJECT #: D7432
ARCH PROJECT #:

GARY WANG
& ASSOCIATES, INC.
1000 Corporate Center Dr., Ste. 550
Monterey Park, CA 91754
TEL: (626) 288-6898 FAX: (626) 768-7101
http://www.garywang.com

LICENSED ARCHITECT GARY H. WANG No. C-32569 REN. 04-30-21 STATE OF CALIFORNIA
05/30/2020

BID SET (2020/05/28) NOT FOR CONSTRUCTION

PANDA EXPRESS
MINI-MALL - SPACE 115
INGERSOLL STREET
FT BENNING, GA

A-104

FINISH PLAN AND SCHEDULE

MATERIAL SCHEDULE

INSTALLED AND FURNISHED BY. G.C. UNLESS NOTED OTHERWISE

NO	MANUFACTURER	DESCRIPTION	SPECIFICATION	REMARKS	FURNISHED BY:	INSTALLED BY:	CONTACT
WP1	CRANE COMPOSITES INC.	F.R.P. THICKNESS: .075	COLOR: #636 (LIGHT GRAY)		G.C.	G.C.	WADE WARFORD 425.260.3495
WP2		S.S. PANEL (22 GA)	FINISH: STRAIGHT BRUSHED FINISH	FURNISHED BY PX/ INSTALLED BY G.C.	G.C.	G.C.	
WP3		S.S. PANEL (22 GA)	FINISH: DIAMOND PATTERN FINISH	FURNISHED BY PX/ INSTALLED BY G.C.	G.C.	G.C.	
W102	WOLF GORDON	PRINT WALL COVERING	COLOR: RED BAMBOO	CUSTOM WALL COVERING AVAILABLE ONLY FROM P.X. VENDOR	G.C.	G.C.	CATHY DY 310.770.1165
QZ-7	CORIAN QUARTZ	COMPOSIT SOLID SURFACE	FINISH: POLISHED COLOR: LONDON SKY	SERVICE COUNTER TOP	G.C.	G.C.	
P-101	SHERWIN-WILLIAMS	PAINT	COLOR: SW 6252 ICE CUBE PROMAR 200, ZERO VOC, LATEX SEMI-GLOSS		G.C.	G.C.	
P-106	SHERWIN-WILLIAMS	PAINT	COLOR: SW 7020 BLACK FOX PROMAR 200, ZERO VOC, LATEX SEMI-GLOSS		G.C.	G.C.	
QT	DALTILE	QUARRY TILE	COLOR: ARID GRAY (0Q42) FINISH: PLAIN	GROUT: MFR: MAPEI - 800.42.MAPEI- WWW.MAPEI.COM STYLE: LATEX MODIFIED GROUT #47 COLOR/FINISH: CHARCOAL/SANDED SIZE: 3/16"	G.C.	G.C.	
QT-1	DALTILE	QUARRY TILE	COLOR: ARID GRAY (0Q42) FINISH: ABRASIVE	GROUT: MFR: MAPEI - 800.42.MAPEI- WWW.MAPEI.COM STYLE: LATEX MODIFIED GROUT #47 COLOR/FINISH: CHARCOAL/SANDED SIZE: 3/16"	G.C.	G.C.	
QT-2	DALTILE -COVE BASE	QUARRY TILE COVE BASE	COLOR: ARID GRAY (0Q42) FINISH: PLAIN	GROUT: MFR: MAPEI - 800.42.MAPEI- WWW.MAPEI.COM STYLE: LATEX MODIFIED GROUT #47 COLOR/FINISH: CHARCOAL/SANDED SIZE: 3/16"	G.C.	G.C.	
T-96	DALTILE - ANCHORAGE	6"X12" COVE BASE S-36C9T	COLOR: BACK AC10 FINISH: UNPOLISHED	GROUT: MFR: MAPEI - 800.42.MAPEI- WWW.MAPEI.COM STYLE: LATEX MODIFIED GROUT #47 COLOR/FINISH: CHARCOAL/SANDED SIZE: 1/8"	G.C.	G.C.	NATIONAL.ACCOUNTS@ DALTILE.COM PH: (877) 556-5728
T-110	DALTILE FOREST PARK	WALL TILE/ MIX OF: 9"X36" AND 6" X 36"	COLOR: TIMBERLAND FP97	GROUT: MFR: MAPEI - 800.42.MAPEI- WWW.MAPEI.COM STYLE: LATEX MODIFIED GROUT #07 COLOR/FINISH: CHOCOLATE/ SANDED SIZE: 1/8"	G.C.	G.C.	NATIONAL.ACCOUNTS@ DALTILE.COM PH: (877) 556-5728
T-112	DALTILE NERO	SIZE: 12"X12"	COLOR: P406	GROUT: MFR: CUSTOM BUILDING PRODUCTS STYLE: LATEX MODIFIED GROUT #370 COLOR/FINISH: DOVE GRAY"	G.C.	G.C.	NATIONAL.ACCOUNTS@ DALTILE.COM PH: (877) 556-5728
T-200	CMC BRAVADA	SIZE: 24"X24"	COLOR: GREIGE	GROUT: MFR: MAPEI - 800.42.MAPEI- WWW.MAPEI.COM STYLE: LATEX MODIFIED GROUT #11 COLOR/FINISH: SAHARA BEIGE/ SANDED SIZE: 1/4"	G.C.	G.C.	CMC DOUG SALATINO PH: (518) 713-5371
S2a	SCHULT IND	60" Ø HEAT-INFUSED FAMILY SEAL	COLOR: WHITE		G.C.	G.C.	JEFFREY SCHULT 1800.783.8998 EXT. 226 JSCHULT@SCHULT.COM

LIGHTING FIXTURE SCHEDULE

PROVIDED FOR INFORMATION ONLY.
VERIFY AND INSTALL PER ELECTRICAL DRAWING

07-04-2013

ITEM	SYMBOL	DESCRIPTION	QTY.	MFR. & CAT. NO.	REMARK
INTERIOR LIGHTING ITEM					
L1	L1	EDGE-LIT LED PANEL 120-277V UE - UNIVERSAL VOLTAGE		MANUFACTURER: LSI FIXTURE: SPF24-LED-50-UE-DIM-35 LED 5000 LUMENS, 3500K COLOR	KITCHEN CEILING LIGHTS. FURNISHED BY LICENSEE / INSTALLED BY G.C.
L1EM	L1EM	2X4 EDGE-LIT LED PANEL 120-277V UE - UNIVERSAL VOLTAGE		MANUFACTURER: LSI FIXTURE: SPF24-LED-50-UE-DIM-35 LED 5000 LUMENS, 3500K COLOR	EMERGENCY KITCHEN CEILING LIGHTS FURNISHED BY LICENSEE/ INSTALLED BY GC
		NOT USED			
L2	L2	2X2 EDGE-LIT LED PANEL (SURFACE MOUNT) 120-277V UE - UNIVERSAL VOLTAGE		MANUFACTURER: LSI FIXTURE: SPF24-LED-50-UE-DIM-35 LED 5000 LUMENS, 3500K COLOR	KITCHEN CEILING LIGHTS. FURNISHED BY LICENSEE / INSTALLED BY G.C.
L4	L4	UNIVERSAL MOUNT EXIT SIGN, LED LIGHTED, 120V WITH BATTERY PACK, 2 FACE, GREEN LETTER		JUNO, NAVILTE, NIBLHO THERMOPLASTIC EMERGENCY LIGHT	EXIT SIGN FURNISHED BY G.C./ INSTALLED BY GC
L6B	L6B	WALK-IN COOLER FLUORESCENT LIGHT, 120 V 48"		KASON FIXTURE: # 18180F00048	FURNISHED BY WIC VENDOR, INSTALLED BY G.C.
L19	L19	DOWN LIGHT, RECESSED IN CEILING		ELITE HOUSING: LD6IC-AT LED MODULE: ELITE LED LIGHTING RL607-14W-120-FL-27K-W-WH	FURNISHED BY LICENSEE/ INSTALLED BY GC
L19EM	L19 EM	EMERGENCY DOWN LIGHT, RECESSED IN CEILING		ELITE HOUSING: LD6IC-AT LED MODULE: ELITE LED LIGHTING RL607-14W-120-FL-30K-SN-SN	EMERGENCY RECESSED DOWN LIGHT - NORMALLY ON INVERTER UNIT - ISOLITE, IMI-12-LC-V1 FURNISHED BY LICENSEE/ INSTALLED BY GC
L6A	L6A	HOOD LIGHT		FURNISHED & INSTALLED BY EQUIPMENT SUPPLIER	LIGHTS SUPPLIED & PRE-WIRED BY HOOD VENDOR. ELECTRIC CONTRACTOR TO CONNECT MAIN WIRES TO SHUNT TRIP BREAKER AND HOOD CONTROL PANEL
L20	L20	LED MR16 DOWN LIGHT, RECESSED IN CEILING		HOUSING: LIGHTOLIER LYTECASTER 302MRSPX TRIM: LIGHTOLIER LYTECASTER 378WHX (WHITE) BULB: LED MR16 MANUFACTURER: GE PRODUCT CODE: 35535	
		NOT USED			
L23	L23	LED TAPE LIGHT		NORA LIGHTING (OR APPROVED EQUAL) 24V HIGH OUTPUT LED TAPE LIGHT LENGTH: 10FT ROLL/ CCT/CRI: 2700K/ 90CRI LUMENS: 350lm/ 4.2W PER FOOT	

CEILING SCHEDULE

INSTALLED AND FURNISHED BY. G.C. UNLESS NOTED OTHERWISE

NO	MANUFACTURER	DESCRIPTION	MATERIAL	FINISH
C2	USG	2' X 4' SUSPENDED T-BAR GRID CEILING SYSTEM	"VINYL ROCK" VINYL CLAD GYP. BD PANELS	SMOOTH AND WASHABLE WHITE
C3	GOLD BOND	MONOLITHIC CEILING ON METAL FRAMING	5/8" GYP. BD.	SMOOTH PAINT (SEE SCHEDULE)

SCHEDULES 2

NTS A-105

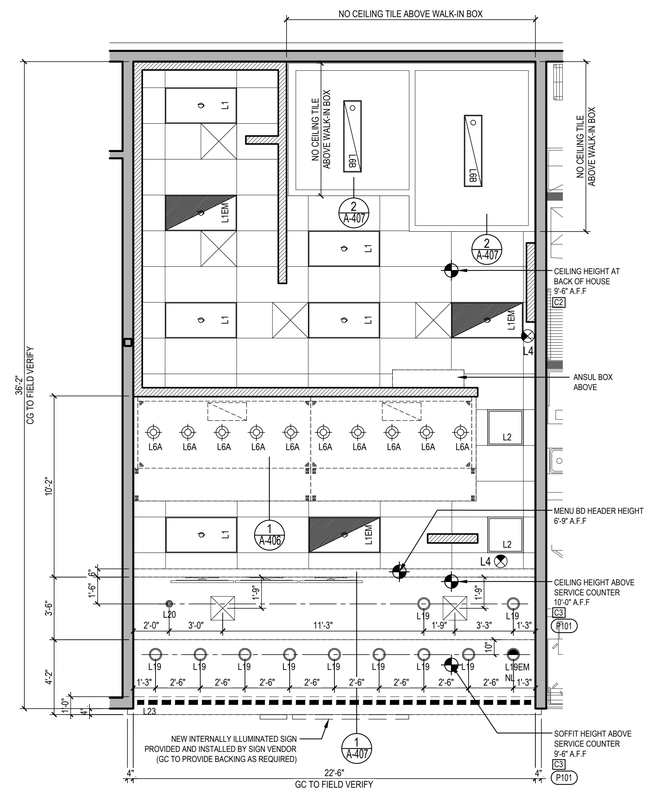

REFLECTED CEILING PLAN 1

Scale = 1/4" = 1'-0" A-105

PANDA RESTAURANT GROUP INC.
1683 Walnut Grove Ave.
Rosemead, California
91770
Telephone: 626.799.9898
Facsimile: 626.372.8288

All ideas, designs, arrangement and plans indicated or represented by this drawing are the property of Panda Express Inc. and were created for use on this specific project. None of these ideas, designs, arrangements or plans may be used by or disclosed to any person, firm, or corporation without the written permission of Panda Express Inc.

REVISIONS:

ISSUE DATE:

1	35% SUBMITTAL	04/24/2020
2	95% SUBMITTAL	05/30/2020

DRAWN BY: STAFF

PANDA PROJECT #: D7432

ARCH PROJECT #:

GARY WANG
& ASSOCIATES, INC.
1000 Corporate Center Dr., Ste. 550
Monterey Park, CA 91754
TEL: (626) 288-6898 FAX: (626) 768-7101
http://www.garywang.com

LICENSED ARCHITECT GARY H. WANG No. C-32569 REN. 04-30-21 STATE OF CALIFORNIA
05/30/2020

BID SET (2020/05/28) NOT FOR CONSTRUCTION

PANDA EXPRESS

MINI-MALL - SPACE 115
INGERSOLL STREET
FT BENNING, GA

A-105

REFLECTED CEILING PLAN

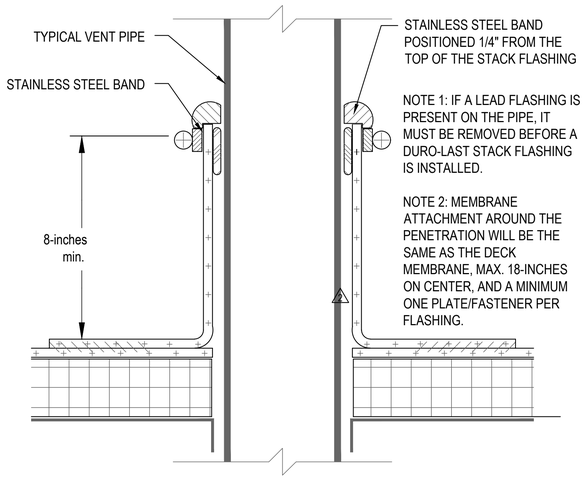

VENT PIPE ROOF PENETRATION DETAIL | 4
NTS | A-106

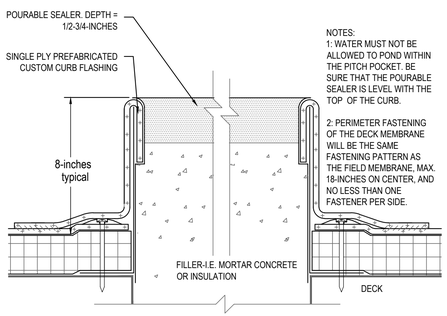

PITCH POCKET DETAIL | 3
NTS | A-106

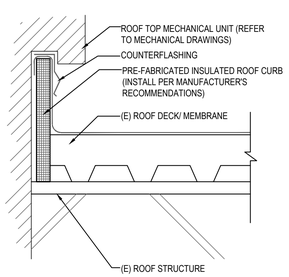

MECHANICAL EQUIPMENT ROOF CURB DETAIL | 2
NTS | A-106

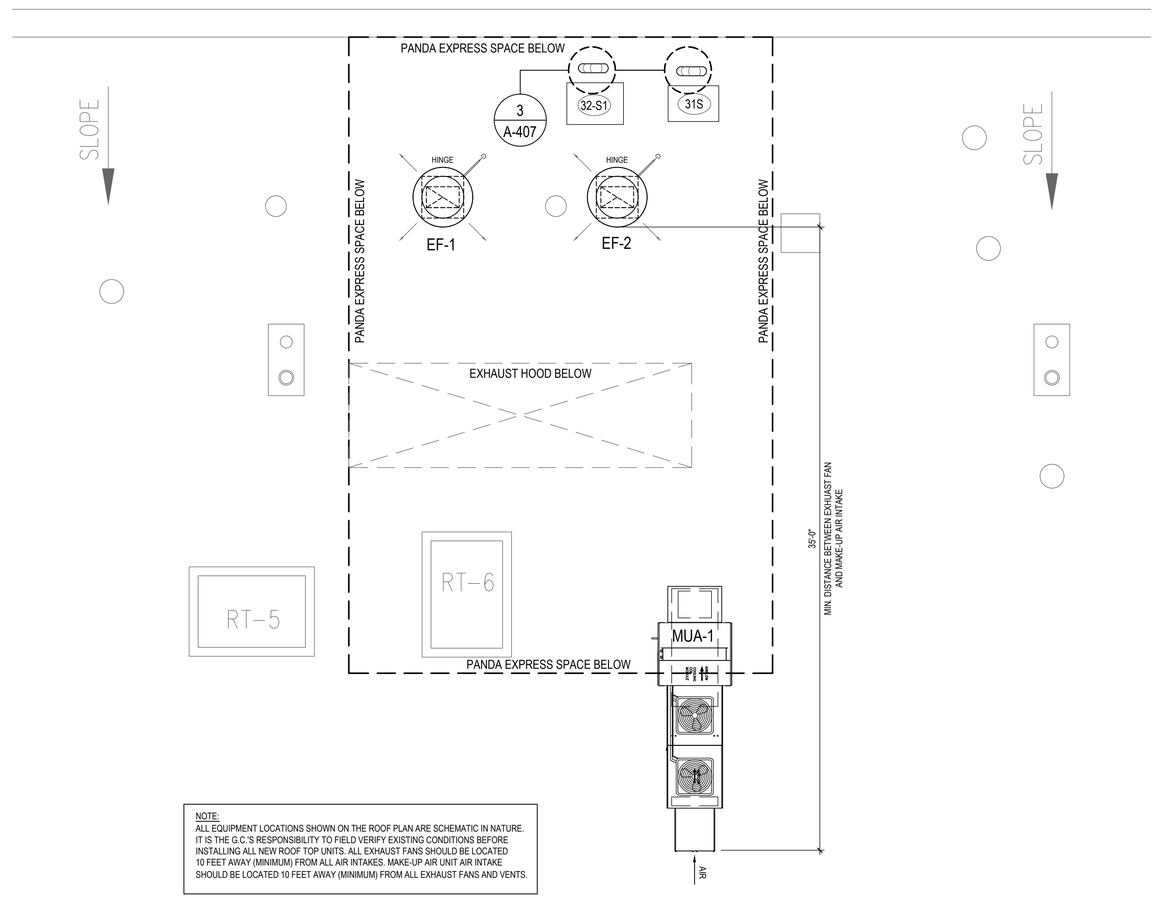

NOTE:
ALL EQUIPMENT LOCATIONS SHOWN ON THE ROOF PLAN ARE SCHEMATIC IN NATURE. IT IS THE G.C.'S RESPONSIBILITY TO FIELD VERIFY EXISTING CONDITIONS BEFORE INSTALLING ALL NEW ROOF TOP UNITS. ALL EXHAUST FANS SHOULD BE LOCATED 10 FEET AWAY (MINIMUM) FROM ALL AIR INTAKES. MAKE-UP AIR UNIT AIR INTAKE SHOULD BE LOCATED 10 FEET AWAY (MINIMUM) FROM ALL EXHAUST FANS AND VENTS.

ROOF PLAN | 1
Scale: 1/4" = 1'-0" | A-106

PANDA RESTAURANT GROUP INC.
1683 Walnut Grove Ave.
Rosemead, California
91770
Telephone: 626.799.9898
Facsimile: 626.372.8288

All ideas, designs, arrangement and plans indicated or represented by this drawing are the property of Panda Express Inc. and were created for use on this specific project. None of these ideas, designs, arrangements or plans may be used by or disclosed to any person, firm, or corporation without the written permission of Panda Express Inc.

REVISIONS:

ISSUE DATE:

1	35% SUBMITTAL	04/24/2020
2	95% SUBMITTAL	05/30/2020

DRAWN BY: STAFF

PANDA PROJECT #: D7432
ARCH PROJECT #:

GARY WANG
& ASSOCIATES, INC.
1000 Corporate Center Dr., Ste. 550
Monterey Park, CA 91754
TEL: (626) 288-6898 FAX: (626) 768-7101
http://www.garywang.com

LICENSED ARCHITECT
GARY H. WANG
No. C-32569
REN. 04-30-21
STATE OF CALIFORNIA
05/30/2020

BID SET (2020/05/28) NOT FOR CONSTRUCTION

PANDA EXPRESS
MINI-MALL - SPACE 115
INGERSOLL STREET
FT BENNING, GA

A-106
ROOF PLAN

MATERIAL SCHEDULE

INSTALLED AND FURNISHED BY. G.C. UNLESS NOTED OTHERWISE

NO	MANUFACTURER	DESCRIPTION	SPECIFICATION	REMARKS	FURNISHED BY:	INSTALLED BY:	CONTACT
WP1	CRANE COMPOSITES INC.	F.R.P. THICKNESS: .075	COLOR: #636 (LIGHT GRAY)		G.C.	G.C.	WADE WARFORD 425.260.3495
WP2		S.S. PANEL (22 GA)	FINISH: STRAIGHT BRUSHED FINISH	FURNISHED BY PX/ INSTALLED BY G.C.	G.C.	G.C.	
WP3		S.S. PANEL (22 GA)	FINISH: DIAMOND PATTERN FINISH	FURNISHED BY PX/ INSTALLED BY G.C.	G.C.	G.C.	
W102	WOLF GORDON	PRINT WALL COVERING	COLOR: RED BAMBOO	CUSTOM WALL COVERING AVAILABLE ONLY FROM P.X. VENDOR	G.C.	G.C.	CATHY DY 310.770.1165
QZ-7	CORIAN QUARTZ	COMPOSIT SOLID SURFACE	FINISH: POLISHED COLOR: LONDON SKY	SERVICE COUNTER TOP	G.C.	G.C.	
P-101	SHERWIN-WILLIAMS	PAINT	COLOR: SW 6252 ICE CUBE PROMAR 200, ZERO VOC, LATEX SEMI-GLOSS		G.C.	G.C.	
P-106	SHERWIN-WILLIAMS	PAINT	COLOR: SW 7020 BLACK FOX PROMAR 200, ZERO VOC, LATEX SEMI-GLOSS		G.C.	G.C.	
QT	DALTILE	QUARRY TILE	COLOR: ARID GRAY (0Q42) FINISH: PLAIN	GROUT MFR: MAPEI - 800.42.MAPEI- WWW.MAPEI.COM STYLE: LATEX MODIFIED GROUT #47 COLOR/FINISH: CHARCOAL/SANDED SIZE: 3/16"	G.C.	G.C.	
QT-1	DALTILE	QUARRY TILE	COLOR: ARID GRAY (0Q42) FINISH: ABRASIVE	GROUT MFR: MAPEI - 800.42.MAPEI- WWW.MAPEI.COM STYLE: LATEX MODIFIED GROUT #47 COLOR/FINISH: CHARCOAL/SANDED SIZE: 3/16"	G.C.	G.C.	
QT-2	DALTILE -COVE BASE	QUARRY TILE COVE BASE	COLOR: ARID GRAY (0Q42) FINISH: PLAIN	GROUT MFR: MAPEI - 800.42.MAPEI- WWW.MAPEI.COM STYLE: LATEX MODIFIED GROUT #47 COLOR/FINISH: CHARCOAL/SANDED SIZE: 3/16"	G.C.	G.C.	
T-96	DALTILE - ANCHORAGE	6"X12" COVE BASE S-36C9T	COLOR: BACK AC10 FINISH: UNPOLISHED	GROUT MFR: MAPEI - 800.42.MAPEI- WWW.MAPEI.COM STYLE: LATEX MODIFIED GROUT #47 COLOR/FINISH: CHARCOAL/SANDED SIZE: 1/8"	G.C.	G.C.	NATIONAL.ACCOUNTS@DALTILE.COM PH: (877) 556-5728
T-110	DALTILE FOREST PARK	WALL TILE/ MIX OF: 9"X36" AND 6" X 36"	COLOR: TIMBERLAND FP97	GROUT MFR: MAPEI - 800.42.MAPEI- WWW.MAPEI.COM STYLE: LATEX MODIFIED GROUT #07 COLOR/FINISH: CHOCOLATE/ SANDED SIZE: 1/8"	G.C.	G.C.	NATIONAL.ACCOUNTS@DALTILE.COM PH: (877) 556-5728
T-112	DALTILE NERO	SIZE: 12"X12"	COLOR: P406	GROUT MFR: CUSTOM BUILDING PRODUCTS STYLE: LATEX MODIFIED GROUT #370 COLOR/FINISH: DOVE GRAY"	G.C.	G.C.	NATIONAL.ACCOUNTS@DALTILE.COM PH: (877) 556-5728
S2a	SCHULT IND	60" Ø HEAT-INFUSED FAMILY SEAL	COLOR: WHITE		G.C.	G.C.	JEFFREY SCHULT 1800.783.8998 EXT. 226 JSCHULT@SCHULT.COM

MATERIAL SCHEDULES | 6

NTS | A-200

1 — CONCEALED BACKING AS INDICATED BY THE DASHED BOX AREAS AROUND WALL SHELVING, SINK BACKS, ETC. SHALL CONSIST OF THE FOLLOWING:

- BACKING @ ALL RATED WALLS AND WALL UNDER EXHAUST HOOD SHALL CONSIST OF 6" 20 GA. METAL STRAPS INSTALLED PRIOR TO INSTALLATION OF GYP. BOARD @ ALL AREAS REQUIRED FOR FASTENING EQUIPMENT SECURELY TO STUD WALL.

- BACKING @ ALL OTHER WALLS SHALL CONSIST OF 5/8" PLYWOOD SHEATHING BEHIND GYP. BOARD WITHIN DASHED BOX AREAS. FINISH OVER WITH SPECIFIED WALL PANEL FINISH PER KITCHEN ELEVATIONS.

2 — CONCEALED BACKING AS INDICATED TO SUPPORT R.O. STORAGE TANK. BLOCKING TO CONSIST OF 6X12 SECURED BETWEEN STUDS WITH SIMPSON A-34 CLIPS, TOP & AND BOTTOM.

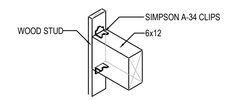

BLOCKNG DETAIL/ NOTES

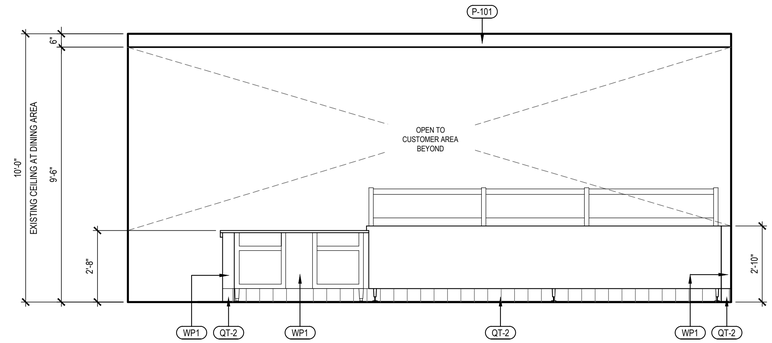

INTERIOR ELEVATION | 5

Scale: 3/8" = 1'-0" | A-200

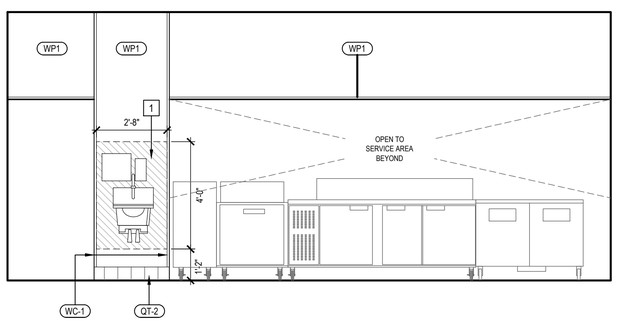

INTERIOR ELEVATION | 4

Scale: 3/8" = 1'-0" | A-200

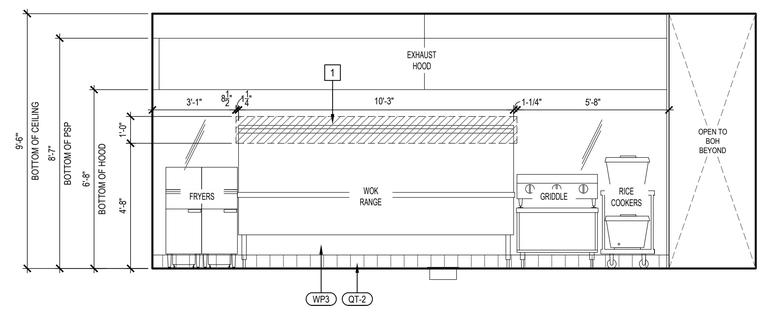

INTERIOR ELEVATION | 3

Scale: 3/8" = 1'-0" | A-200

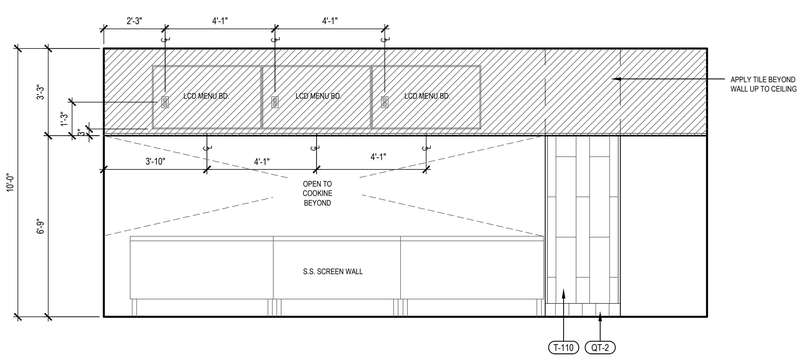

INTERIOR ELEVATION | 2

Scale: 3/8" = 1'-0" | A-200

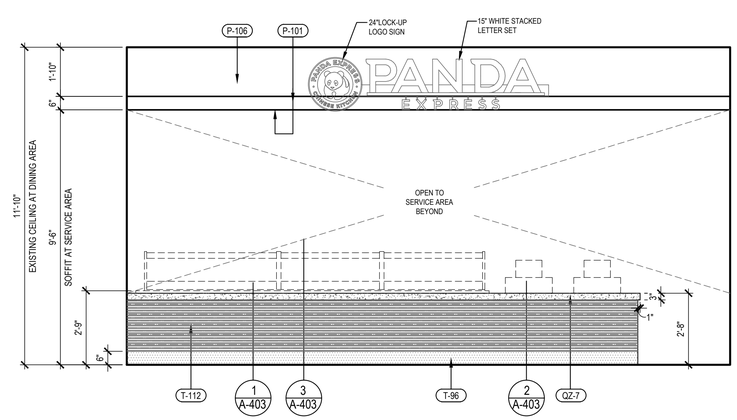

INTERIOR ELEVATION | 1

Scale: 3/8" = 1'-0" | A-200

PANDA RESTAURANT GROUP INC.
1683 Walnut Grove Ave.
Rosemead, California
91770
Telephone: 626.799.9898
Facsimile: 626.372.8288

All ideas, designs, arrangement and plans indicated or represented by this drawing are the property of Panda Express Inc. and were created for use on this specific project. None of these ideas, designs, arrangements or plans may be used by or disclosed to any person, firm, or corporation without the written permission of Panda Express Inc.

REVISIONS:

ISSUE DATE:

1	35% SUBMITTAL	04/24/2020
2	95% SUBMITTAL	05/30/2020

DRAWN BY: STAFF

PANDA PROJECT #: D7432

ARCH PROJECT #:

GARY WANG
& ASSOCIATES, INC.
1000 Corporate Center Dr., Ste. 550
Monterey Park, CA 91754
TEL: (626) 288-6898 FAX: (626) 768-7101
http://www.garywang.com

LICENSED ARCHITECT GARY H. WANG No. C-32569 REN. 04-30-21 STATE OF CALIFORNIA

05/30/2020

BID SET (2020/05/28) NOT FOR CONSTRUCTION

PANDA EXPRESS

MINI-MALL - SPACE 115
INGERSOLL STREET
FT BENNING, GA

A-200

INTERIOR ELEVATIONS

MATERIAL SCHEDULE

INSTALLED AND FURNISHED BY. G.C. UNLESS NOTED OTHERWISE

NO	MANUFACTURER	DESCRIPTION	SPECIFICATION	REMARKS	FURNISHED BY:	INSTALLED BY:	CONTACT
WP1	CRANE COMPOSITES INC.	F.R.P. THICKNESS: .075	COLOR: #636 (LIGHT GRAY)		G.C.	G.C.	WADE WARFORD 425.260.3495
WP2		S.S. PANEL (22 GA)	FINISH: STRAIGHT BRUSHED FINISH	FURNISHED BY PX/ INSTALLED BY G.C.	G.C.	G.C.	
WP3		S.S. PANEL (22 GA)	FINISH: DIAMOND PATTERN FINISH	FURNISHED BY PX/ INSTALLED BY G.C.	G.C.	G.C.	
W102	WOLF GORDON	PRINT WALL COVERING	COLOR: RED BAMBOO	CUSTOM WALL COVERING AVAILABLE ONLY FROM P.X. VENDOR	G.C.	G.C.	CATHY DY 310.770.1165
QZ-7	CORIAN QUARTZ	COMPOSIT SOLID SURFACE	FINISH: POLISHED COLOR: LONDON SKY	SERVICE COUNTER TOP	G.C.	G.C.	
P-101	SHERWIN-WILLIAMS	PAINT	COLOR: SW 6252 ICE CUBE PROMAR 200, ZERO VOC, LATEX SEMI-GLOSS		G.C.	G.C.	
P-106	SHERWIN-WILLIAMS	PAINT	COLOR: SW 7020 BLACK FOX PROMAR 200, ZERO VOC, LATEX SEMI-GLOSS		G.C.	G.C.	
QT	DALTILE	QUARRY TILE	COLOR: ARID GRAY (0Q42) FINISH: PLAIN	GROUT: MFR: MAPEI - 800.42.MAPEI- WWW.MAPEI.COM STYLE: LATEX MODIFIED GROUT #47 COLOR/FINISH: CHARCOAL/SANDED SIZE: 3/16"	G.C.	G.C.	
QT-1	DALTILE	QUARRY TILE	COLOR: ARID GRAY (0Q42) FINISH: ABRASIVE	GROUT: MFR: MAPEI - 800.42.MAPEI- WWW.MAPEI.COM STYLE: LATEX MODIFIED GROUT #47 COLOR/FINISH: CHARCOAL/SANDED SIZE: 3/16"	G.C.	G.C.	
QT-2	DALTILE -COVE BASE	QUARRY TILE COVE BASE	COLOR: ARID GRAY (0Q42) FINISH: PLAIN	GROUT: MFR: MAPEI - 800.42.MAPEI- WWW.MAPEI.COM STYLE: LATEX MODIFIED GROUT #47 COLOR/FINISH: CHARCOAL/SANDED SIZE: 3/16"	G.C.	G.C.	
T-96	DALTILE - ANCHORAGE	6"X12" COVE BASE S-36C9T	COLOR: BACK AC10 FINISH: UNPOLISHED	GROUT: MFR: MAPEI - 800.42.MAPEI- WWW.MAPEI.COM STYLE: LATEX MODIFIED GROUT #47 COLOR/FINISH: CHARCOAL/SANDED SIZE: 1/8"	G.C.	G.C.	NATIONAL.ACCOUNTS@DALTILE.COM PH: (877) 556-5728
T-110	DALTILE FOREST PARK	WALL TILE/ MIX OF: 9"X36" AND 6" X 36"	COLOR: TIMBERLAND FP97	GROUT: MFR: MAPEI - 800.42.MAPEI- WWW.MAPEI.COM STYLE: LATEX MODIFIED GROUT #07 COLOR/FINISH: CHOCOLATE/ SANDED SIZE: 1/8"	G.C.	G.C.	NATIONAL.ACCOUNTS@DALTILE.COM PH: (877) 556-5728
T-112	DALTILE NERO	SIZE: 12"X12"	COLOR: P406	GROUT: MFR: CUSTOM BUILDING PRODUCTS STYLE: LATEX MODIFIED GROUT #370 COLOR/FINISH: DOVE GRAY"	G.C.	G.C.	NATIONAL.ACCOUNTS@DALTILE.COM PH: (877) 556-5728
S2a	SCHULT IND	60" Ø HEAT-INFUSED FAMILY SEAL	COLOR: WHITE		G.C.	G.C.	JEFFREY SCHULT 1800.783.8998 EXT. 226 JSCHULT@SCHULT.COM

MATERIAL SCHEDULES | 6

NTS | A-201

1 — CONCEALED BACKING AS INDICATED BY THE DASHED BOX AREAS AROUND WALL SHELVING, SINK BACKS, ETC. SHALL CONSIST OF THE FOLLOWING:

- BACKING @ ALL RATED WALLS AND WALL UNDER EXHAUST HOOD SHALL CONSIST OF 6" 20 GA. METAL STRAPS INSTALLED PRIOR TO INSTALLATION OF GYP. BOARD @ ALL AREAS REQUIRED FOR FASTENING EQUIPMENT SECURELY TO STUD WALL.

- BACKING @ ALL OTHER WALLS SHALL CONSIST OF 5/8" PLYWOOD SHEATHING BEHIND GYP. BOARD WITHIN DASHED BOX AREAS. FINISH OVER WITH SPECIFIED WALL PANEL FINISH PER KITCHEN ELEVATIONS.

2 — CONCEALED BACKING AS INDICATED TO SUPPORT R.O. STORAGE TANK. BLOCKING TO CONSIST OF 6X12 SECURED BETWEEN STUDS WITH SIMPSON A-34 CLIPS, TOP & AND BOTTOM.

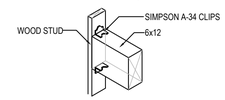

BLOCKNG DETAIL/ NOTES

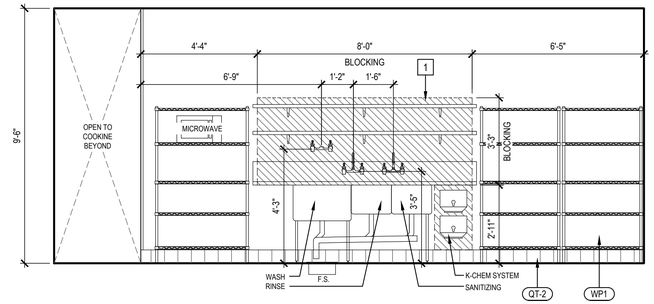

INTERIOR ELEVATION | 3

Scale: 3/8" = 1'-0" | A-201

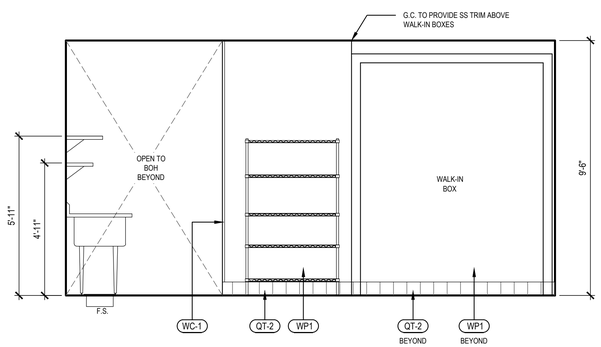

INTERIOR ELEVATION | 5

Scale: 3/8" = 1'-0" | A-201

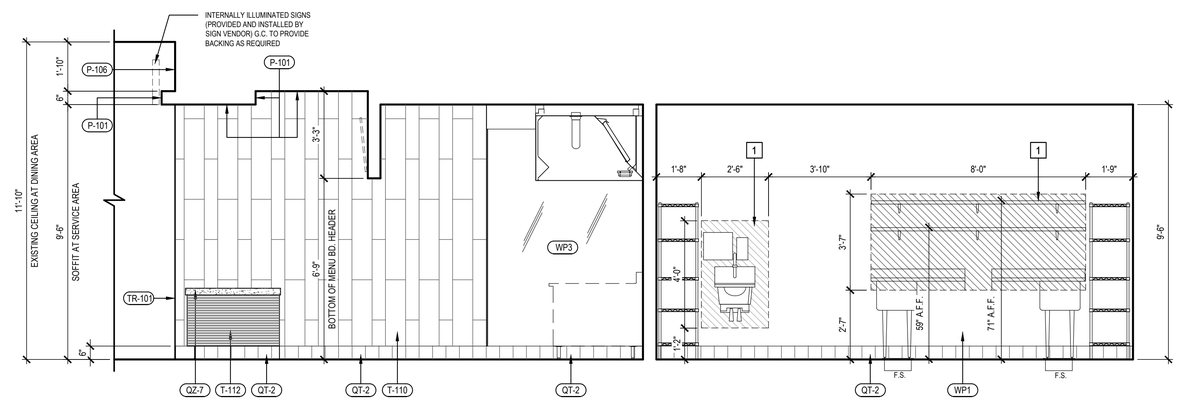

INTERIOR ELEVATION | 2

Scale: 3/8" = 1'-0" | A-201

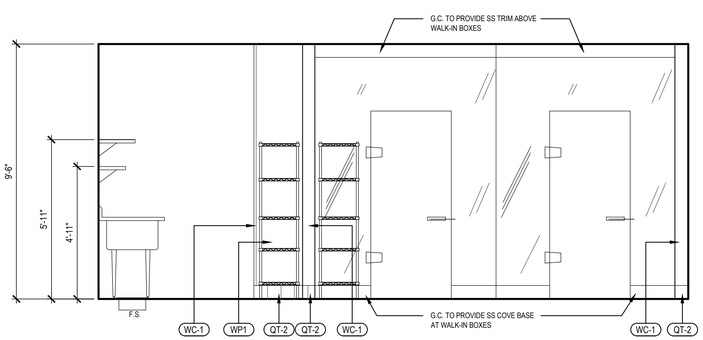

INTERIOR ELEVATION | 4

Scale: 3/8" = 1'-0" | A-201

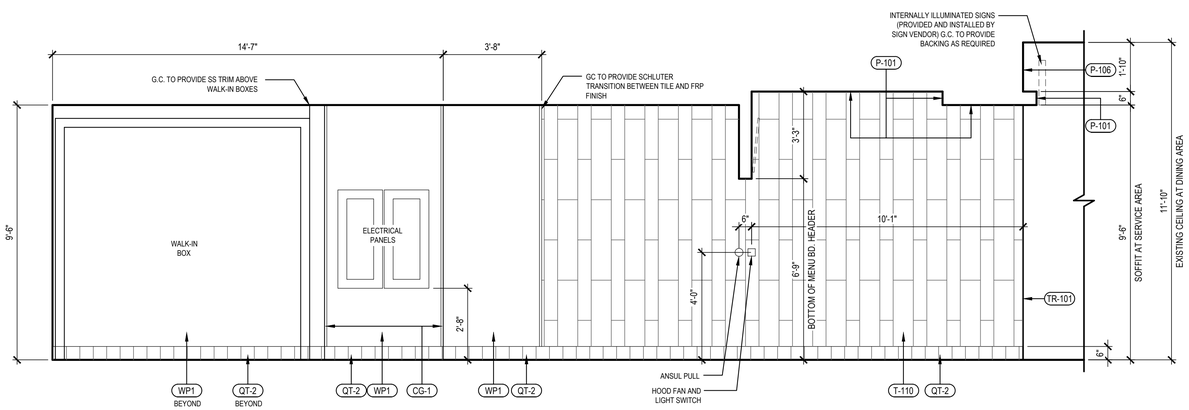

INTERIOR ELEVATION | 1

Scale: 3/8" = 1'-0" | A-201

BID SET (2020/05/28) NOT FOR CONSTRUCTION

PANDA EXPRESS CHINESE KITCHEN

PANDA RESTAURANT GROUP INC.
1683 Walnut Grove Ave.
Rosemead, California
91770
Telephone: 626.799.9898
Facsimile: 626.372.8288

All ideas, designs, arrangement and plans indicated or represented by this drawing are the property of Panda Express Inc. and were created for use on this specific project. None of these ideas, designs, arrangements or plans may be used by or disclosed to any person, firm, or corporation without the written permission of Panda Express Inc.

REVISIONS:

ISSUE DATE:

1	35% SUBMITTAL	04/24/2020
2	95% SUBMITTAL	05/30/2020

DRAWN BY: STAFF

PANDA PROJECT #: D7432

ARCH PROJECT #:

GARY WANG & ASSOCIATES, INC.
1000 Corporate Center Dr., Ste. 550
Monterey Park, CA 91754
TEL: (626) 288-6898 FAX: (626) 768-7101
http://www.garywang.com

LICENSED ARCHITECT GARY D. WANG No. C-32569 REN. 04-30-21 STATE OF CALIFORNIA

05/30/2020

PANDA EXPRESS

MINI-MALL - SPACE 115
INGERSOLL STREET
FT BENNING, GA

A-201

INTERIOR ELEVATIONS

MATERIAL SCHEDULE

INSTALLED AND FURNISHED BY. G.C. UNLESS NOTED OTHERWISE

NO	MANUFACTURER	DESCRIPTION	SPECIFICATION	REMARKS	FURNISHED BY:	INSTALLED BY:	CONTACT
WP1	CRANE COMPOSITES INC.	F.R.P. THICKNESS: .075	COLOR: #636 (LIGHT GRAY)		G.C.	G.C.	WADE WARFORD 425.260.3495
WP2		S.S. PANEL (22 GA)	FINISH: STRAIGHT BRUSHED FINISH	FURNISHED BY PX/ INSTALLED BY G.C.	G.C.	G.C.	
WP3		S.S. PANEL (22 GA)	FINISH: DIAMOND PATTERN FINISH	FURNISHED BY PX/ INSTALLED BY G.C.	G.C.	G.C.	
W102	WOLF GORDON	PRINT WALL COVERING	COLOR: RED BAMBOO	CUSTOM WALL COVERING AVAILABLE ONLY FROM P.X. VENDOR	G.C.	G.C.	CATHY DY 310.770.1165
QZ-7	CORIAN QUARTZ	COMPOSIT SOLID SURFACE	FINISH: POLISHED COLOR: LONDON SKY	SERVICE COUNTER TOP	G.C.	G.C.	
P-101	SHERWIN-WILLIAMS	PAINT	COLOR: SW 6252 ICE CUBE PROMAR 200, ZERO VOC, LATEX SEMI-GLOSS		G.C.	G.C.	
P-106	SHERWIN-WILLIAMS	PAINT	COLOR: SW 7020 BLACK FOX PROMAR 200, ZERO VOC, LATEX SEMI-GLOSS		G.C.	G.C.	
QT	DALTILE	QUARRY TILE	COLOR: ARID GRAY (0Q42) FINISH: PLAIN	GROUT: MFR: MAPEI - 800.42.MAPEI- WWW.MAPEI.COM STYLE: LATEX MODIFIED GROUT #47 COLOR/FINISH: CHARCOAL/SANDED SIZE: 3/16"	G.C.	G.C.	
QT-1	DALTILE	QUARRY TILE	COLOR: ARID GRAY (0Q42) FINISH: ABRASIVE	GROUT: MFR: MAPEI - 800.42.MAPEI- WWW.MAPEI.COM STYLE: LATEX MODIFIED GROUT #47 COLOR/FINISH: CHARCOAL/SANDED SIZE: 3/16"	G.C.	G.C.	
QT-2	DALTILE -COVE BASE	QUARRY TILE COVE BASE	COLOR: ARID GRAY (0Q42) FINISH: PLAIN	GROUT: MFR: MAPEI - 800.42.MAPEI- WWW.MAPEI.COM STYLE: LATEX MODIFIED GROUT #47 COLOR/FINISH: CHARCOAL/SANDED SIZE: 3/16"	G.C.	G.C.	
T-96	DALTILE - ANCHORAGE	6"X12" COVE BASE S-36C9T	COLOR: BACK AC10 FINISH: UNPOLISHED	GROUT: MFR: MAPEI - 800.42.MAPEI- WWW.MAPEI.COM STYLE: LATEX MODIFIED GROUT #47 COLOR/FINISH: CHARCOAL/SANDED SIZE: 1/8"	G.C.	G.C.	NATIONAL.ACCOUNTS@DALTILE.COM PH: (877) 556-5728
T-110	DALTILE FOREST PARK	WALL TILE/ MIX OF: 9"X36" AND 6" X 36"	COLOR: TIMBERLAND FP97	GROUT: MFR: MAPEI - 800.42.MAPEI- WWW.MAPEI.COM STYLE: LATEX MODIFIED GROUT #07 COLOR/FINISH: CHOCOLATE/ SANDED SIZE: 1/8"	G.C.	G.C.	NATIONAL.ACCOUNTS@DALTILE.COM PH: (877) 556-5728
T-112	DALTILE NERO	SIZE: 12"X12"	COLOR: P406	GROUT: MFR: CUSTOM BUILDING PRODUCTS STYLE: LATEX MODIFIED GROUT #370 COLOR/FINISH: DOVE GRAY"	G.C.	G.C.	NATIONAL.ACCOUNTS@DALTILE.COM PH: (877) 556-5728
S2a	SCHULT IND	60" Ø HEAT-INFUSED FAMILY SEAL	COLOR: WHITE		G.C.	G.C.	JEFFREY SCHULT 1800.783.8998 EXT. 226 JSCHULT@SCHULT.COM

MATERIAL SCHEDULES 6

NTS A-202

NOT USED 3

Scale: 3/8" = 1'-0" A-202

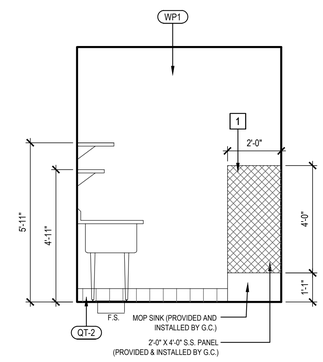

INTERIOR ELEVATION 2

Scale: 3/8" = 1'-0" A-202

NOT USED 5

Scale: 3/8" = 1'-0" A-202

1 CONCEALED BACKING AS INDICATED BY THE DASHED BOX AREAS AROUND WALL SHELVING, SINK BACKS, ETC. SHALL CONSIST OF THE FOLLOWING:

- BACKING @ ALL RATED WALLS AND WALL UNDER EXHAUST HOOD SHALL CONSIST OF 6" 20 GA. METAL STRAPS INSTALLED PRIOR TO INSTALLATION OF GYP. BOARD @ ALL AREAS REQUIRED FOR FASTENING EQUIPMENT SECURELY TO STUD WALL.

- BACKING @ ALL OTHER WALLS SHALL CONSIST OF 5/8" PLYWOOD SHEATHING BEHIND GYP. BOARD WITHIN DASHED BOX AREAS. FINISH OVER WITH SPECIFIED WALL PANEL FINISH PER KITCHEN ELEVATIONS.

2 CONCEALED BACKING AS INDICATED TO SUPPORT R.O. STORAGE TANK. BLOCKING TO CONSIST OF 6X12 SECURED BETWEEN STUDS WITH SIMPSON A-34 CLIPS, TOP & AND BOTTOM.

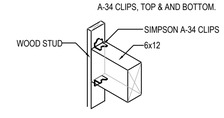

BLOCKNG DETAIL/ NOTES

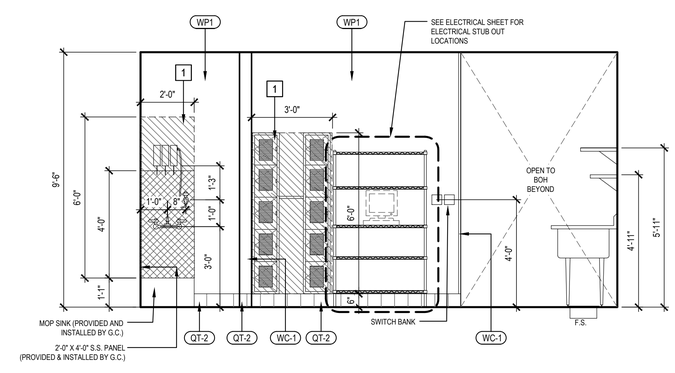

INTERIOR ELEVATION 1

Scale: 3/8" = 1'-0" A-202

NOT USED 4

Scale: 3/8" = 1'-0" A-202

PANDA EXPRESS CHINESE KITCHEN

PANDA RESTAURANT GROUP INC.
1683 Walnut Grove Ave.
Rosemead, California
91770
Telephone: 626.799.9898
Facsimile: 626.372.8288

All ideas, designs, arrangement and plans indicated or represented by this drawing are the property of Panda Express Inc. and were created for use on this specific project. None of these ideas, designs, arrangements or plans may be used by or disclosed to any person, firm, or corporation without the written permission of Panda Express Inc.

REVISIONS:

ISSUE DATE:

1	35% SUBMITTAL	04/24/2020
2	95% SUBMITTAL	05/30/2020

DRAWN BY: STAFF

PANDA PROJECT #: D7432

ARCH PROJECT #:

GARY WANG & ASSOCIATES, INC.
1000 Corporate Center Dr., Ste. 550
Monterey Park, CA 91754
TEL: (626) 288-6898 FAX: (626) 768-7101
http://www.garywang.com

LICENSED ARCHITECT GARY H. WANG No. C-32569 REN. 04-30-21 STATE OF CALIFORNIA

05/30/2020

BID SET (2020/05/28) NOT FOR CONSTRUCTION

PANDA EXPRESS

MINI-MALL - SPACE 115
INGERSOLL STREET
FT BENNING, GA

A-202

INTERIOR ELEVATIONS

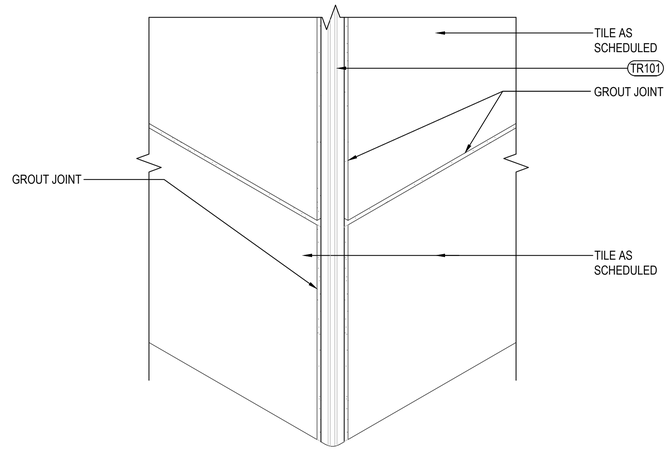

OUTSIDE CORNER DETAIL | 3

SCALE: 6" = 1'-0" | A-400

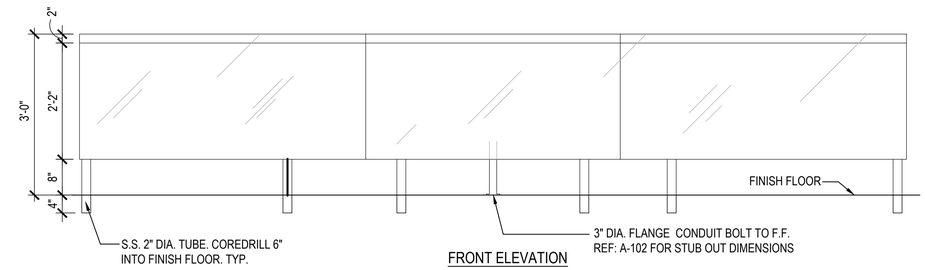

FRONT ELEVATION

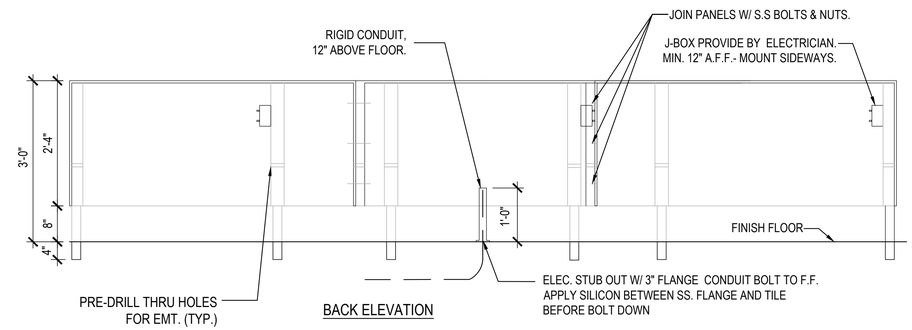

BACK ELEVATION

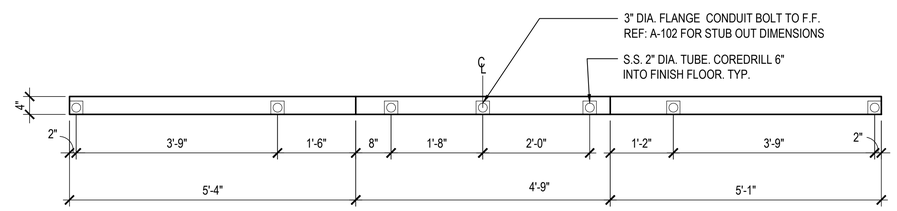

BOTTOM VIEW

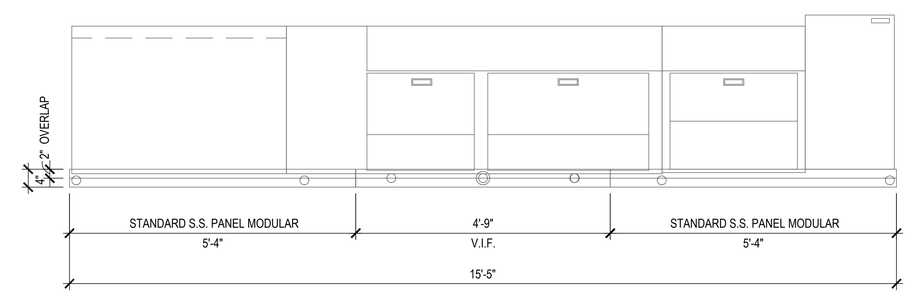

TOP VIEW

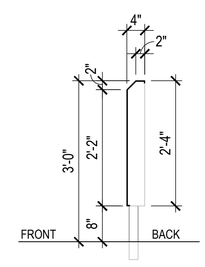

SECTION VIEW

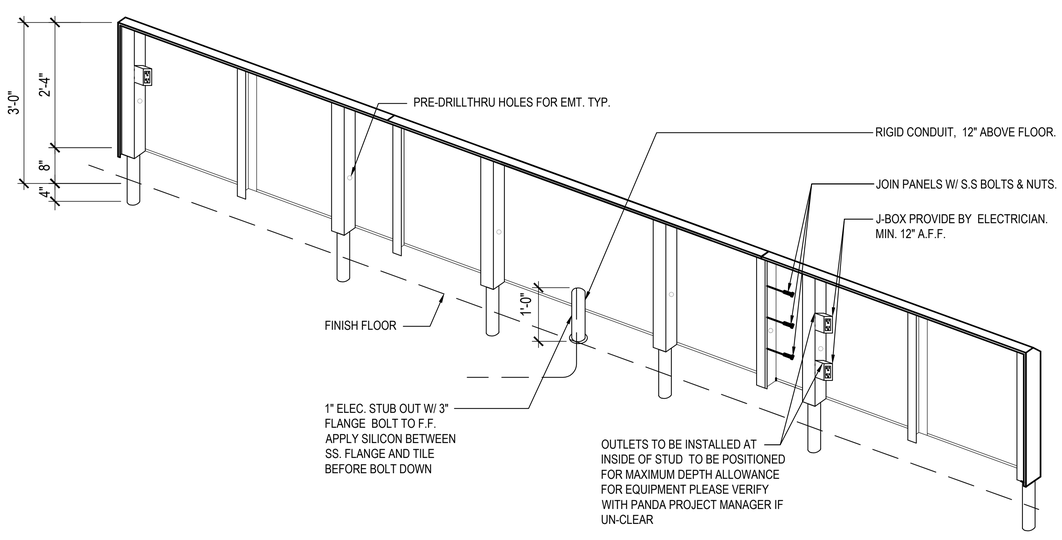

STAINLESS STEEL OUTLET PANEL (ISOMETRIC VIEW) | 2

SCALE: NTS | A-400

STAINLESS STEEL OUTLET PANEL

SCALE: NTS

PANDA RESTAURANT GROUP INC.
1683 Walnut Grove Ave.
Rosemead, California
91770
Telephone: 626.799.9898
Facsimile: 626.372.8288

All ideas, designs, arrangement and plans indicated or represented by this drawing are the property of Panda Express Inc. and were created for use on this specific project. None of these ideas, designs, arrangements or plans may be used by or disclosed to any person, firm, or corporation without the written permission of Panda Express Inc.

REVISIONS:

ISSUE DATE:

1	35% SUBMITTAL	04/24/2020
2	95% SUBMITTAL	05/30/2020

DRAWN BY: STAFF

PANDA PROJECT #: D7432

ARCH PROJECT #:

GARY WANG
& ASSOCIATES, INC.
1000 Corporate Center Dr., Ste. 550
Monterey Park, CA 91754
TEL: (626) 288-6898 FAX: (626) 768-7101
http://www.garywang.com

LICENSED ARCHITECT GARY H. WANG No. C-32569 REN: 04-30-21 STATE OF CALIFORNIA
05/30/2020

BID SET (2020/05/28) NOT FOR CONSTRUCTION

PANDA EXPRESS

MINI-MALL - SPACE 115
INGERSOLL STREET
FT BENNING, GA

A-400

ARCHITECTURAL DETAILS

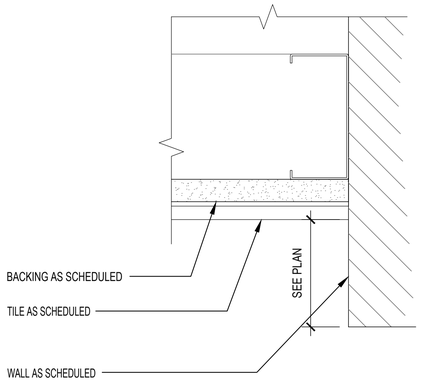

C SECTION

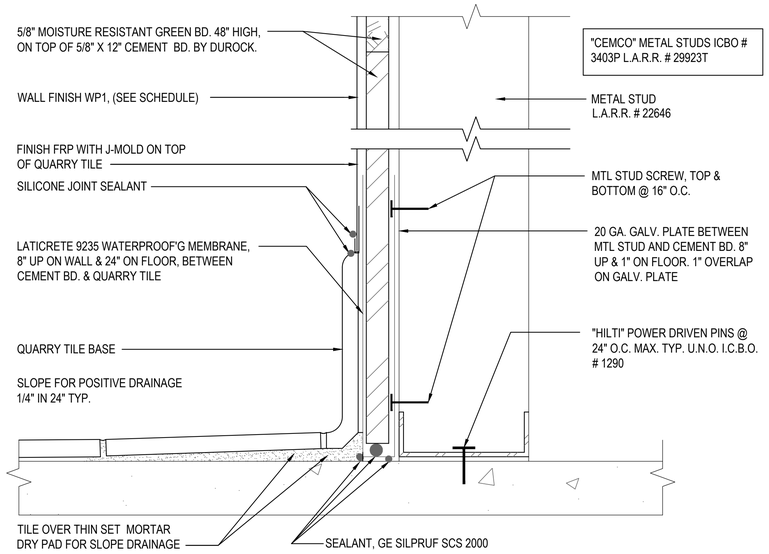

WALL BASE @ KITCHEN | 9
SCALE: 3" = 1'-0" | A-401

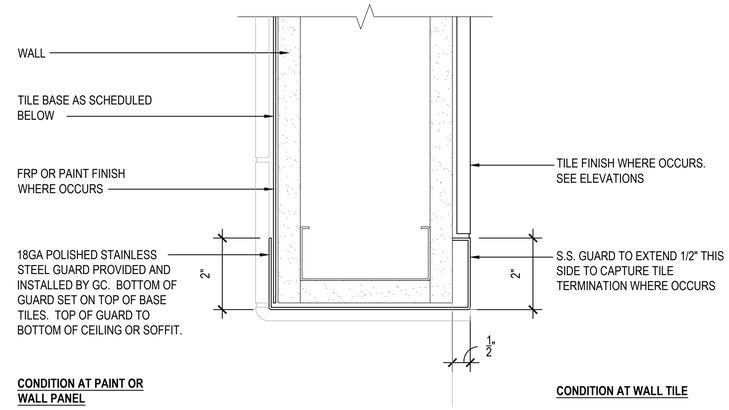

WALL CAP DETAIL | 3
SCALE: 3" = 1'-0" | A-401

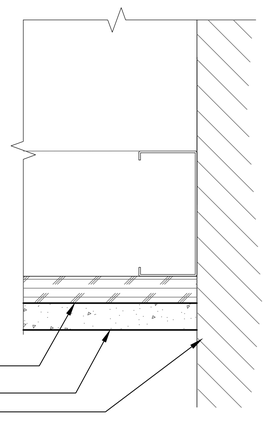

B SECTION

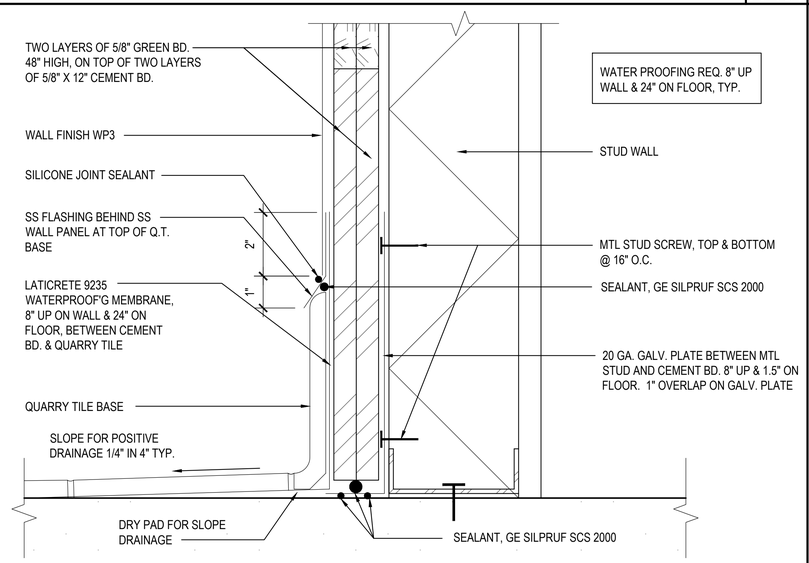

WALL BASE @ COOKLINE | 8
SCALE: 3" = 1'-0" | A-401

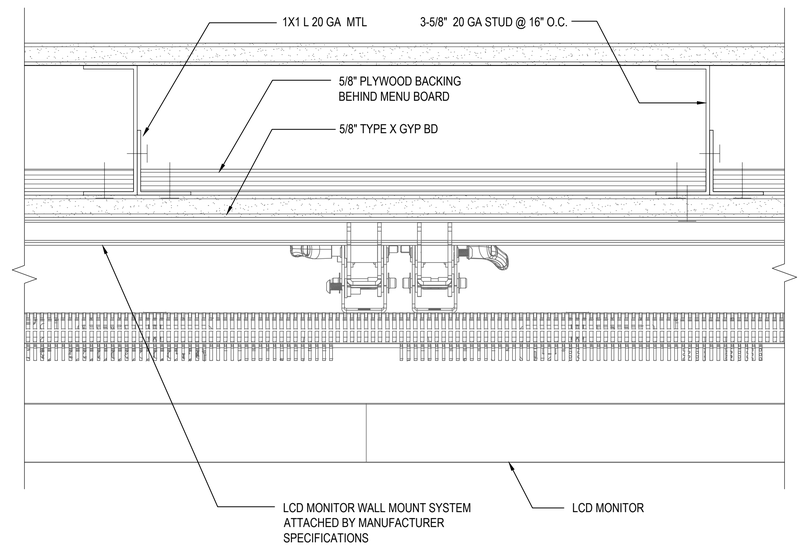

DIGITAL MENU BACKING DETAIL (WHERE APPLICABLE) | 2
SCALE: 3" = 1'-0" | A-401

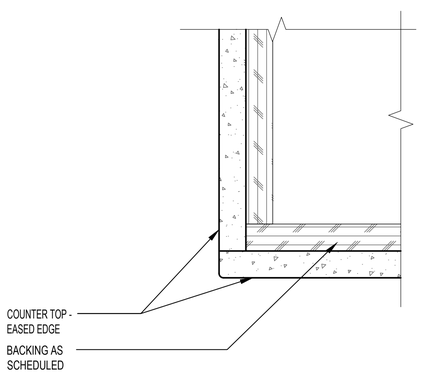

A SECTION

SERVICE COUNTERTOP TRIM DETAIL | 13
SCALE: 3" = 1'-0" | A-401

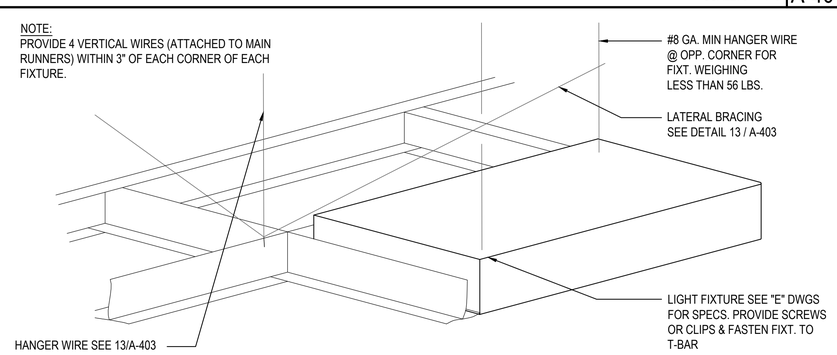

LIGHT FIXTURE DETAIL | 7
SCALE: NTS | A-401

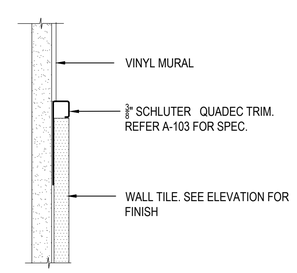

A TILE/TRIM WALL DETAIL

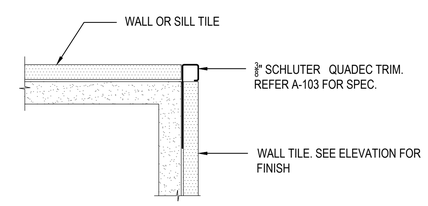

B TILE/TRIM WALL DETAIL

TILE TRIM DETAIL | 1
SCALE: 3" = 1'-0" | A-401

BID SET (2020/05/28) NOT FOR CONSTRUCTION

PANDA EXPRESS CHINESE KITCHEN

PANDA RESTAURANT GROUP INC.
1683 Walnut Grove Ave.
Rosemead, California
91770
Telephone: 626.799.9898
Facsimile: 626.372.8288

All ideas, designs, arrangement and plans indicated or represented by this drawing are the property of Panda Express Inc. and were created for use on this specific project. None of these ideas, designs, arrangements or plans may be used by or disclosed to any person, firm, or corporation without the written permission of Panda Express Inc.

REVISIONS:

ISSUE DATE:

1	35% SUBMITTAL	04/24/2020
2	95% SUBMITTAL	05/30/2020

DRAWN BY: STAFF

PANDA PROJECT #: D7432
ARCH PROJECT #:

GARY WANG
& ASSOCIATES, INC.
1000 Corporate Center Dr., Ste. 550
Monterey Park, CA 91754
TEL: (626) 288-6898 FAX: (626) 768-7101
http://www.garywang.com

LICENSED ARCHITECT GARY H. WANG No. C-32569 REN. 04-30-21 STATE OF CALIFORNIA
05/30/2020

PANDA EXPRESS
MINI-MALL - SPACE 115
INGERSOLL STREET
FT BENNING, GA

A-401
ARCHITECTURAL DETAILS

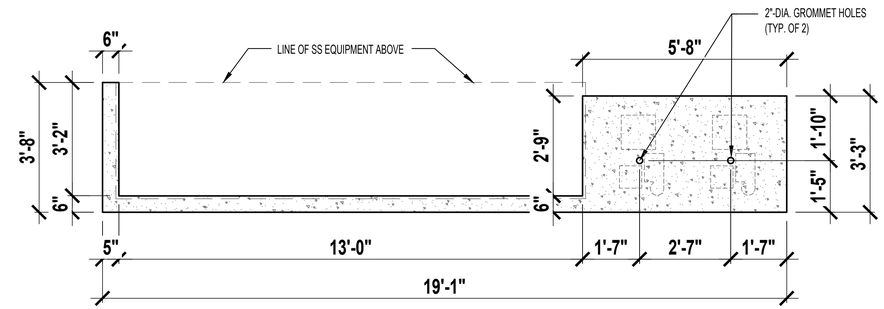

SERVICE COUNTER COUNTERTOP | 3

SCALE: 1/2" - 1'-0" | A-402

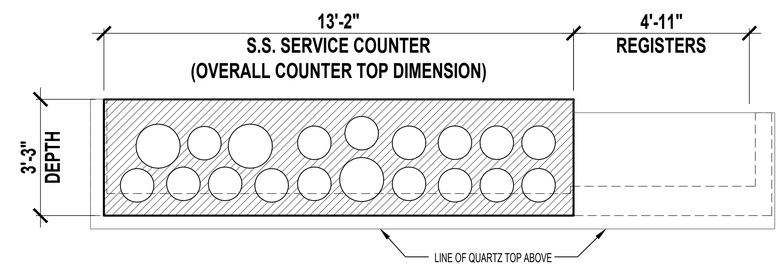

SERVICE COUNTER S.S. EQUIPMENT | 2

SCALE: 1/2" - 1'-0" | A-402

NOTES:

1. S.S. EQUIPMENT WILL BE BY PANDA EXPRESS VENDOR.
2. LOW WALL AND COUNTERTOPS BY GC.

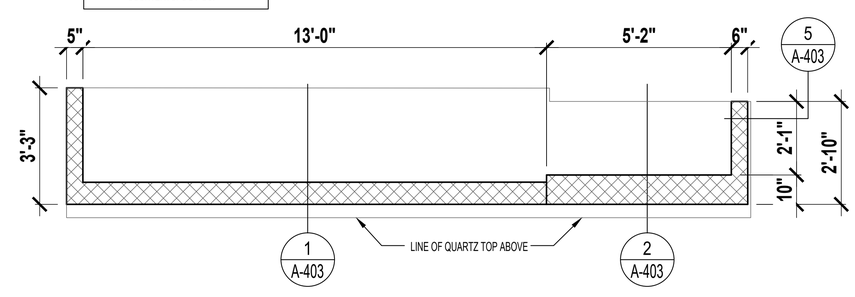

SERVICE COUNTER DIE WALL | 1

SCALE: 1/2" - 1'-0" | A-402

BID SET (2020/05/28) NOT FOR CONSTRUCTION

PANDA RESTAURANT GROUP INC.
1683 Walnut Grove Ave.
Rosemead, California
91770
Telephone: 626.799.9898
Facsimile: 626.372.8288

All ideas, designs, arrangement and plans indicated or represented by this drawing are the property of Panda Express Inc. and were created for use on this specific project. None of these ideas, designs, arrangements or plans may be used by or disclosed to any person, firm, or corporation without the written permission of Panda Express Inc.

REVISIONS:

ISSUE DATE:

1	35% SUBMITTAL	04/24/2020
2	95% SUBMITTAL	05/30/2020

DRAWN BY: STAFF

PANDA PROJECT #: D7432

ARCH PROJECT #:

GARY WANG
& ASSOCIATES, INC.
1000 Corporate Center Dr., Ste. 550
Monterey Park, CA 91754
TEL: (626) 288-6898 FAX: (626) 768-7101
http://www.garywang.com

LICENSED ARCHITECT
GARY H. WANG
No. C-32569
REN. 04-30-21
STATE OF CALIFORNIA
05/30/2020

PANDA EXPRESS

MINI-MALL - SPACE 115
INGERSOLL STREET
FT BENNING, GA

A-402

ARCHITECTURAL DETAILS

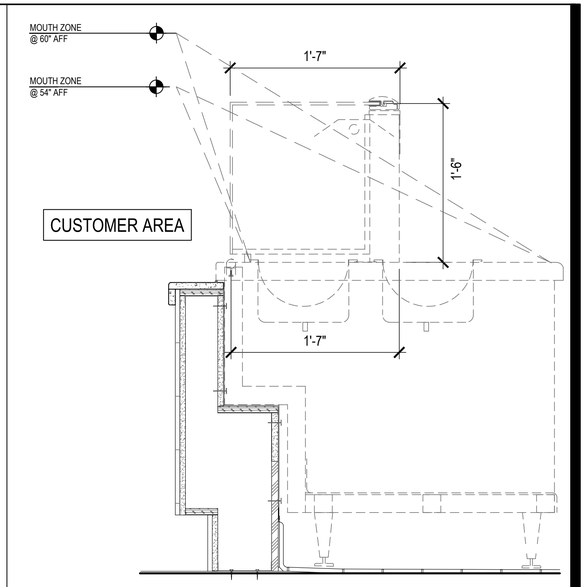

SNEEZE GUARD HEIGHTS | 3
Scale: NTS | A-403

NOT USED | 6
Scale: NTS | A-403

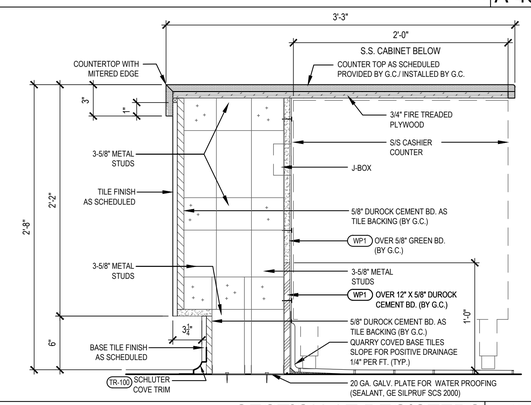

SECTION AT REGISTERS | 2
NTS | A-403

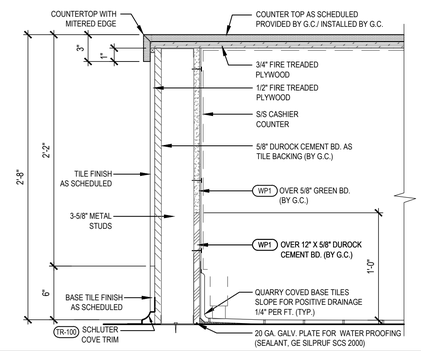

END WALL DETAIL | 5
NTS | A-403

NOT USED | 8
NTS | A-403

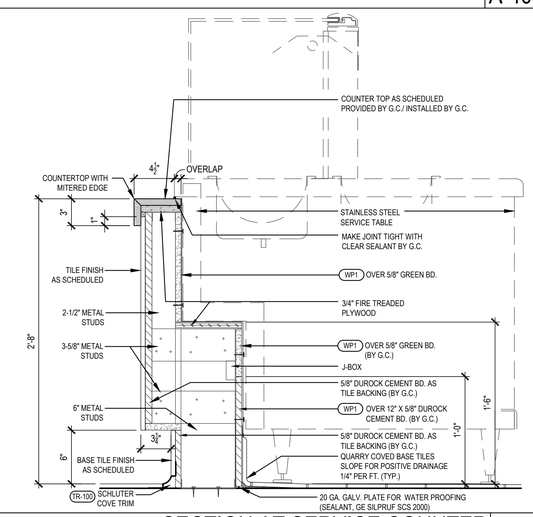

SECTION AT SERVICE COUNTER | 1
NTS | A-403

NOT USED | 4
NTS | A-403

NOT USED | 7
NTS | A-403

BID SET (2020/05/28) NOT FOR CONSTRUCTION

PANDA EXPRESS
CHINESE KITCHEN

PANDA RESTAURANT GROUP INC.
1683 Walnut Grove Ave.
Rosemead, California
91770
Telephone: 626.799.9898
Facsimile: 626.372.8288

All ideas, designs, arrangement and plans indicated or represented by this drawing are the property of Panda Express Inc. and were created for use on this specific project. None of these ideas, designs, arrangements or plans may be used by or disclosed to any person, firm, or corporation without the written permission of Panda Express Inc.

REVISIONS:

ISSUE DATE:

1	35% SUBMITTAL	04/24/2020
2	95% SUBMITTAL	05/30/2020

DRAWN BY: STAFF

PANDA PROJECT #: D7432
ARCH PROJECT #:

GARY WANG
& ASSOCIATES, INC.
1000 Corporate Center Dr., Ste. 550
Monterey Park, CA 91754
TEL: (626) 288-6898 FAX: (626) 768-7101
http://www.garywang.com

LICENSED ARCHITECT
GARY H. WANG
No. C-32569
REN. 04-30-21
STATE OF CALIFORNIA
05/30/2020

PANDA EXPRESS

MINI-MALL - SPACE 115
INGERSOLL STREET
FT BENNING, GA

A-403

ARCHITECTURAL
DETAILS

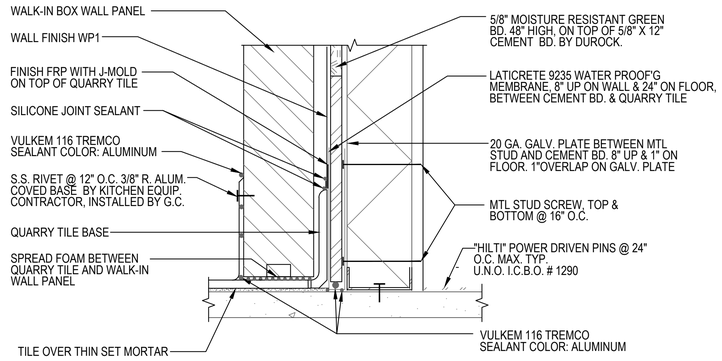

WALL BASE @ WALK-IN STUD WALL | 16
Scale: 3" = 1'-0" | A-405

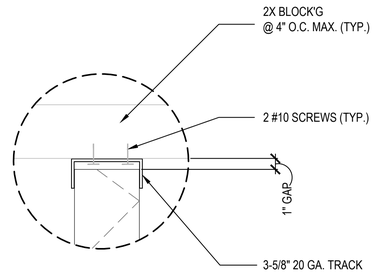

METAL STUD CONNECTION | 12
Scale: 1-1/2" = 1'-0" | A-405

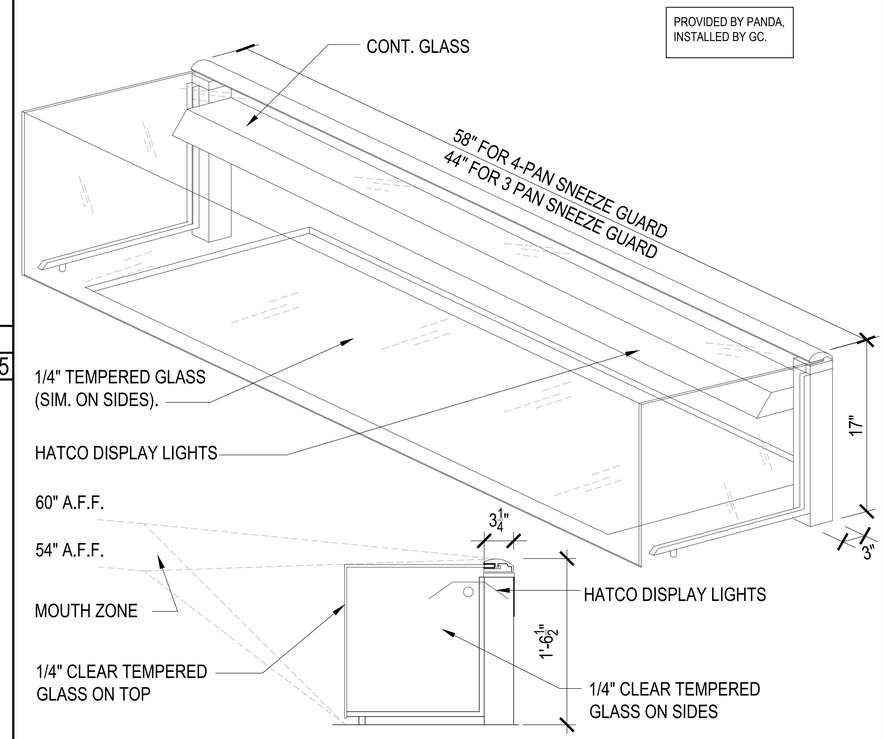

SNEEZE GUARD SECTION | 3
Scale: NTS | A-405

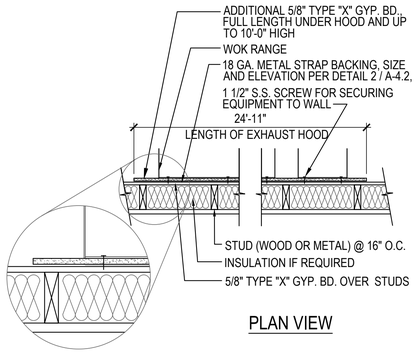

PLAN VIEW

GYP. BOARD BEHIND COOKLINE | 15
SCALE: NTS | A-405

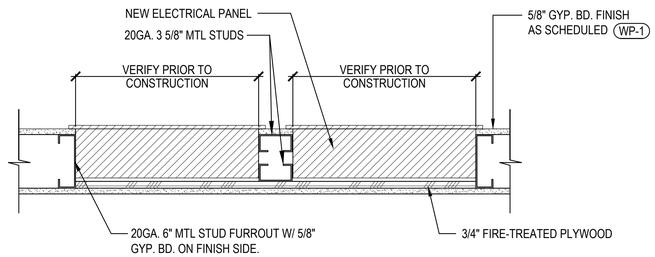

NOTE:
VERIFY ALL WALL PLACEMENT DIMENSIONS W/ ELECTRICAL PANEL SIZE, SPACING & MOUNTING HEIGHT REQUIREMENTS PRIOR TO CONSTRUCTION.

RATED WALLS:
G.C. TO PROVIDE 3M PRODUCT CS-195 COMPOSITE SHEETS AND INSTALL PER MANUFACTURERS RECOMMENDATIONS OR FIRE BLANKETS APPROVED BY LOCAL AUTHORITIES TO MAINTAIN INTEGRITY OF FIRE RATED WALL.

ELECTRICAL PANELS DETAIL (WHERE APPLICABLE) | 11
Scale: 1-1/2" = 1'-0" | A-405

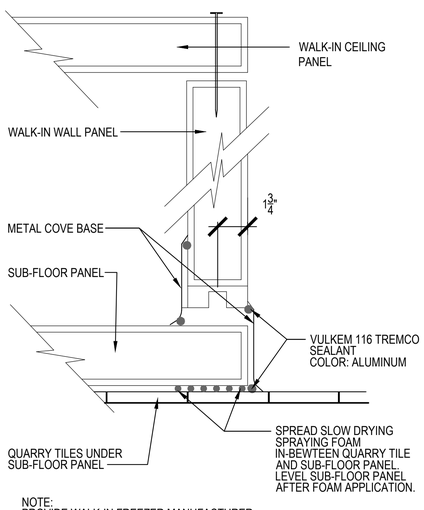

NOTE:
PROVIDE WALK-IN FREEZER MANUFACTURER FORM PLASTIC INSULATION COMPLIANCE LABEL PER SEC.2602 UBC 97

TYP. WALK-IN FREEZER LOCATION | 13
Scale: 3" = 1'-0" | A-405

NOTE:
INSTALLER TO PROVIDE A WATER-TIGHT SEAL BETWEEN BOTTOM OF COOLER BOX WALL AND QUARRY TILE FLOOR

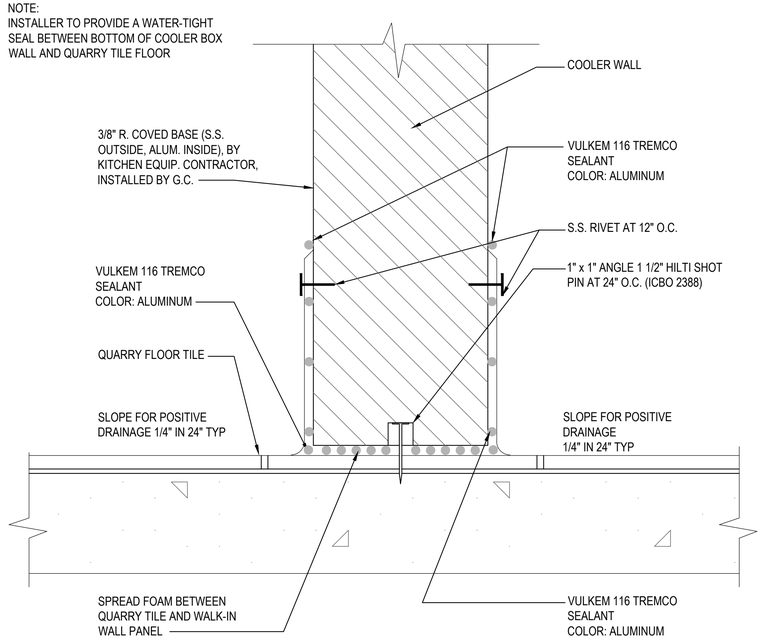

WALK-IN COOLER BASE | 9
Scale: 1/2" = 1'-0" | A-405

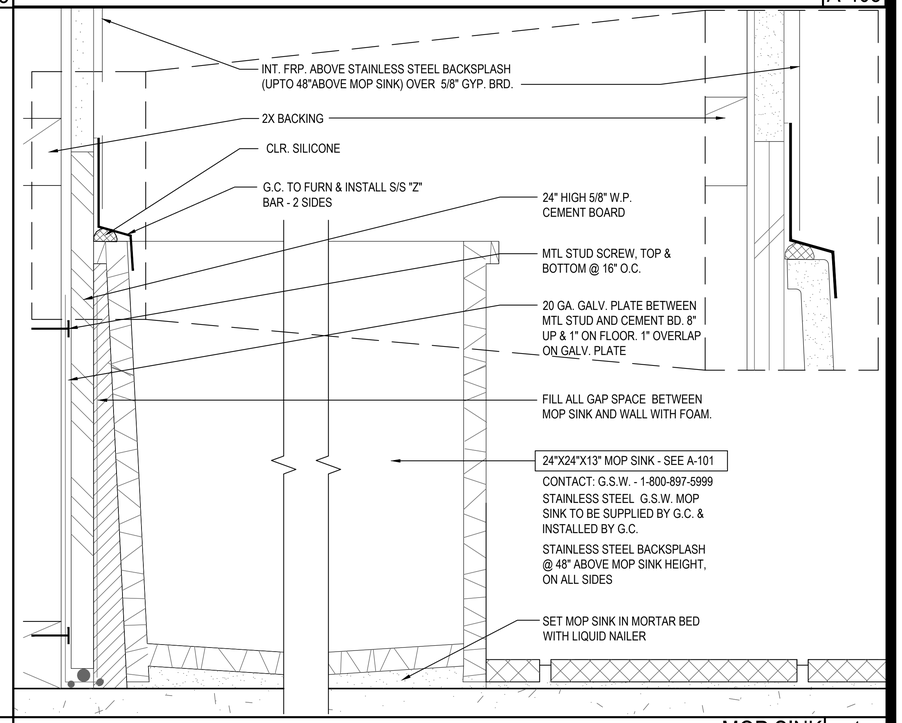

MOP SINK | 1
SCALE: 6" = 1'-0" | A-405

BID SET (2020/05/28) NOT FOR CONSTRUCTION

PANDA RESTAURANT GROUP INC.
1683 Walnut Grove Ave.
Rosemead, California
91770
Telephone: 626.799.9898
Facsimile: 626.372.8288

All ideas, designs, arrangement and plans indicated or represented by this drawing are the property of Panda Express Inc. and were created for use on this specific project. None of these ideas, designs, arrangements or plans may be used by or disclosed to any person, firm, or corporation without the written permission of Panda Express Inc.

REVISIONS:

ISSUE DATE:

1	35% SUBMITTAL	04/24/2020
2	95% SUBMITTAL	05/30/2020

DRAWN BY: STAFF

PANDA PROJECT #: D7432
ARCH PROJECT #:

GARY WANG
& ASSOCIATES, INC.
1000 Corporate Center Dr., Ste. 550
Monterey Park, CA 91754
TEL: (626) 288-6898 FAX: (626) 768-7101
http://www.garywang.com

LICENSED ARCHITECT GARY H. WANG No. C-32569 REN. 04-30-21 STATE OF CALIFORNIA
05/30/2020

PANDA EXPRESS
MINI-MALL - SPACE 115
INGERSOLL STREET
FT BENNING, GA

A-405
ARCHITECTURAL DETAILS

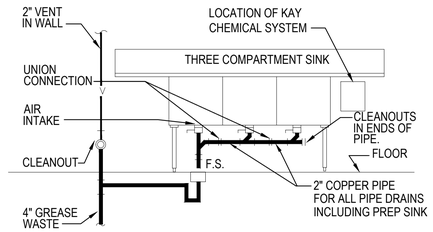

ARRANGEMENT SHOWN IS SCHEMATIC. ADJUST TO SUIT FIELD CONDITIONS OR MEET LOCAL CODE REQUIREMENTS. COPPER PIPE, FITINGS AND CONNECTORS ALL AROUND SINK AND TRAP. CONNECT TRAP FROM CENTER COMPARTMENT.

NOT USED | 15
NTS A-406

UTILITY SINK | 12
Scale: NTS A-406

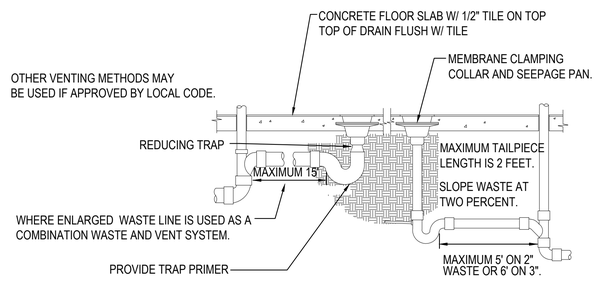

LOCATE FLOOR DRAIN/SINK WHERE SHOWN ON DIMENSIONED ARCHITEC- TURAL PLAN. IF FLOOR STRUCTURE INTERFERES WITH FLOOR SINK, MOVE SIDEWAYS IF POSSIBLE, OTHERWISE MOVE BACK. ALWAYS LOCATE WHERE EASILY ACCESSIBLE, BUT NOT IN FOOT TRAFFIC. IF SITUATION IS FLOOR SLAB ON GRADE, PROVIDE BACKFILL PER SPECIFICATIONS. IF CONCRETE FLOOR IS NOT EXISTING, SET DRAIN IN PLACE AND POUR AROUND IT, OR BLOCK OUT AND POUR IN LATER. IF CONCRETE FLOOR IS EXISTING, SAW CUT OR CORE DRILL IT. SET DRAIN BODY IN PLACE AND POUR AROUND IT. THE TOP OF THE FLOOR SINK / DRAIN SHOULD BE SET AT THE SAME ELEVATION AS THE SLAB AND THEN DISHED OUT 1/2 AT THE DRAIN SLOPING TO NOTHING AT THE 2' RADIUS POINT. IF SITUATION IS FLOOR NOT ON GRADE, REFER TO "FLOOR PENETRATION" DETAIL FOR VENTS. PROVIDE TRAP PRIMER FOR FLOOR DRAINS IN RESTROOMS.

NOT USED | 14
NTS A-406

FLOOR DRAIN / SINK | 10
Scale: NTS A-406

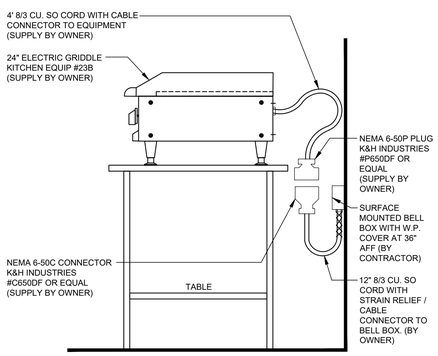

DETAIL AT ELECTRIC GRILL | 13
NTS A-406

NOTE:
IF UTILITY IS NOT AT FULL HEIGHT SHIWN, PROVIDE PIPING WITH ELBOWS TO RAISE INLET.

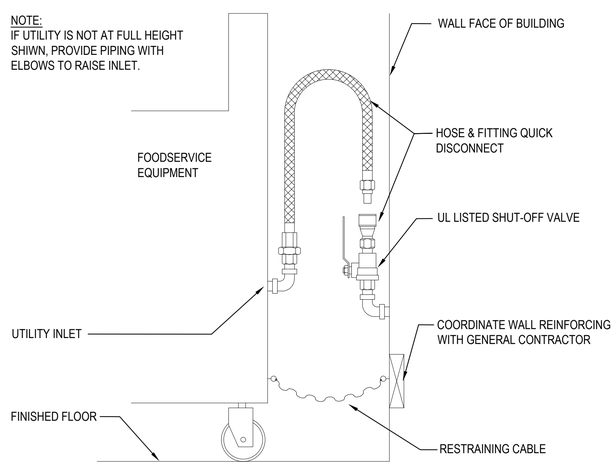

FRYER QUICK DISCONNECT | 9
SCALE: NTS A-406

METAL STUDS: CEMCO
ICC ESR - 3016

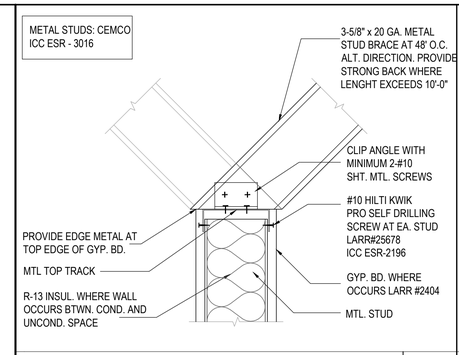

WALL ATTACHMENT | 3
SCALE: NOT TO SCALE

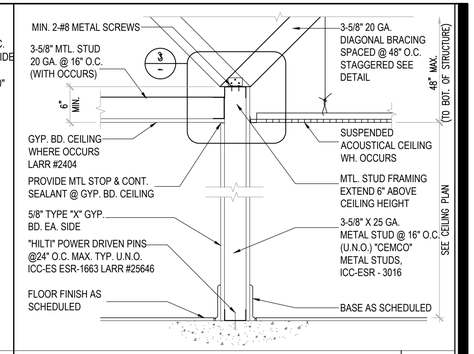

TYP. NON-BEARING PARTITION | 2
SCALE: NOT TO SCALE

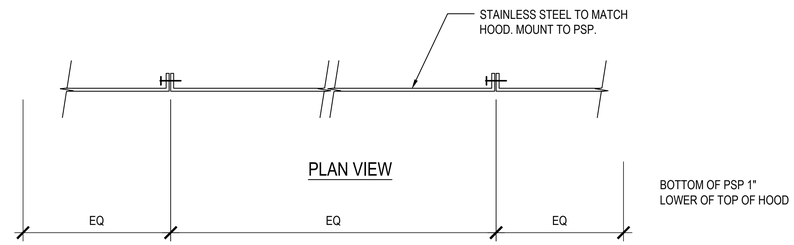

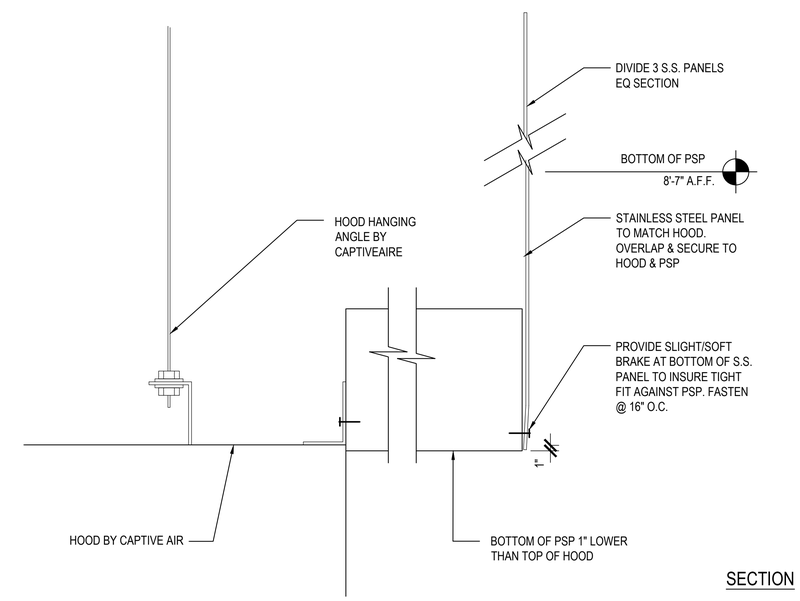

SECTION

S.S. DETAIL @ EXHAUST HOOD | 1
SCALE: 1/2" = 1'-0" A-406

BID SET (2020/05/28) NOT FOR CONSTRUCTION

PANDA RESTAURANT GROUP INC.
1683 Walnut Grove Ave.
Rosemead, California
91770
Telephone: 626.799.9898
Facsimile: 626.372.8288

All ideas, designs, arrangement and plans indicated or represented by this drawing are the property of Panda Express Inc. and were created for use on this specific project. None of these ideas, designs, arrangements or plans may be used by or disclosed to any person, firm, or corporation without the written permission of Panda Express Inc.

REVISIONS:

ISSUE DATE:

1	35% SUBMITTAL	04/24/2020
2	95% SUBMITTAL	05/30/2020

DRAWN BY: STAFF

PANDA PROJECT #: D7432
ARCH PROJECT #:

GARY WANG
& ASSOCIATES, INC.
1000 Corporate Center Dr., Ste. 550
Monterey Park, CA 91754
TEL: (626) 288-6898 FAX: (626) 768-7101
http://www.garywang.com

LICENSED ARCHITECT GARY H. WANG No. C-32569 REN. 04-30-21 STATE OF CALIFORNIA
05/30/2020

PANDA EXPRESS
MINI-MALL - SPACE 115
INGERSOLL STREET
FT BENNING, GA

A-406
ARCHITECTURAL DETAILS

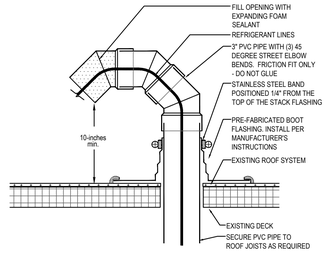

AT REFRIGERATION LINES

ROOF PENETRATION DETAILS	3
NOT TO SCALE	A-407

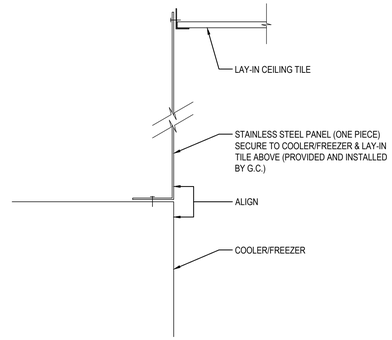

S.S. DETAIL @ COOLER/ FREEZER	2
NTS	A-407

NOT USED	5
NTS	A-407

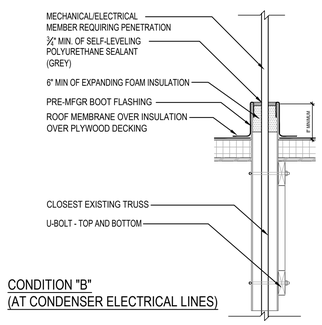

CONDITION "B"
(AT CONDENSER ELECTRICAL LINES)

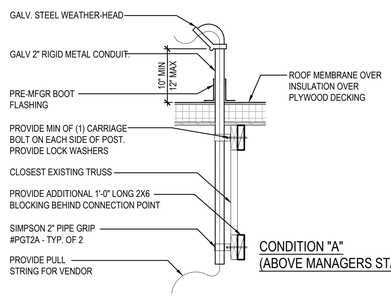

CONDITION "A"
(ABOVE MANAGERS STATION)

ROOF PENETRATION DETAILS	4
NOT TO SCALE	A-407

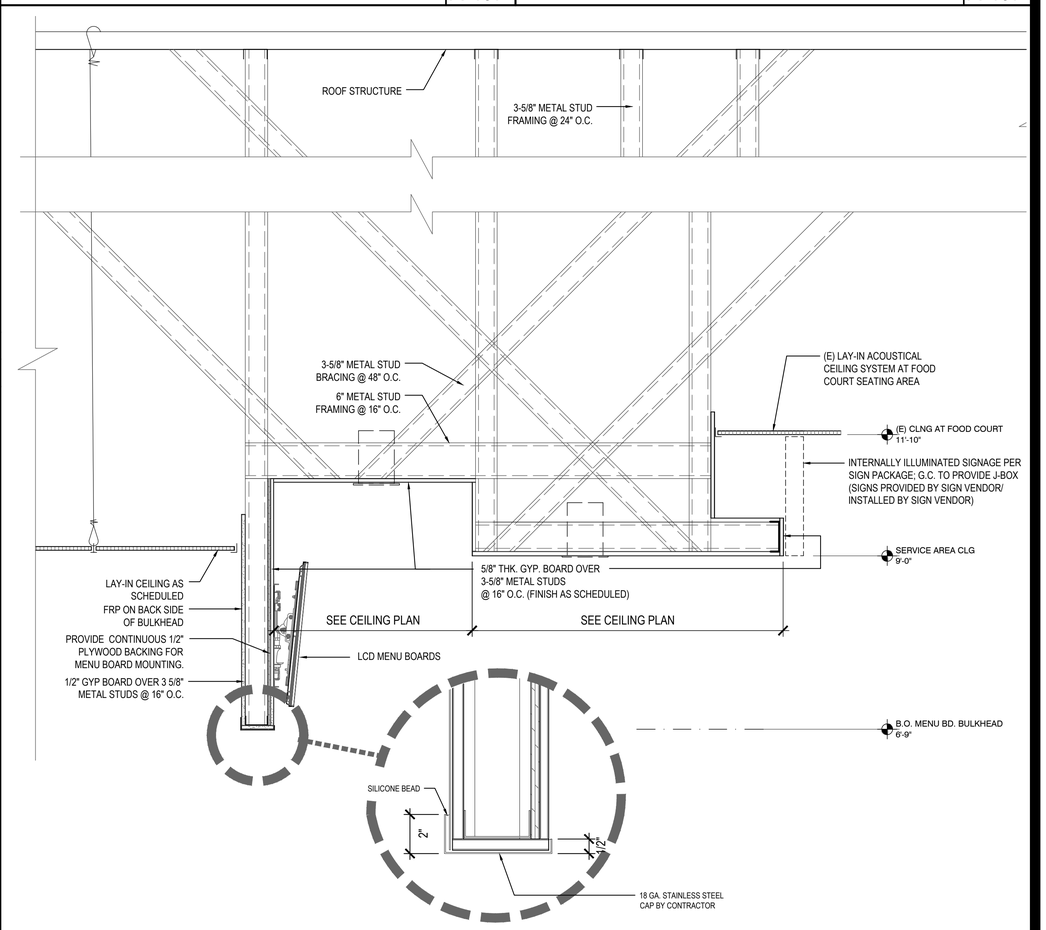

SECTION AT SERVICE AREA CEILING	1
NOT TO SCALE	A-407

PANDA EXPRESS CHINESE KITCHEN

PANDA RESTAURANT GROUP INC.
1683 Walnut Grove Ave.
Rosemead, California
91770
Telephone: 626.799.9898
Facsimile: 626.372.8288

All ideas, designs, arrangement and plans indicated or represented by this drawing are the property of Panda Express Inc. and were created for use on this specific project. None of these ideas, designs, arrangements or plans may be used by or disclosed to any person, firm, or corporation without the written permission of Panda Express Inc.

REVISIONS:

ISSUE DATE:

1	35% SUBMITTAL	04/24/2020
2	95% SUBMITTAL	05/30/2020

DRAWN BY: STAFF

PANDA PROJECT #: D7432
ARCH PROJECT #:

GARY WANG
& ASSOCIATES, INC.
1000 Corporate Center Dr., Ste. 550
Monterey Park, CA 91754
TEL: (626) 288-6898 FAX: (626) 768-7101
http://www.garywang.com

LICENSED ARCHITECT GARY A. WANG No. C-32569 REN. 04-30-21 STATE OF CALIFORNIA
05/30/2020

BID SET (2020/05/28) NOT FOR CONSTRUCTION

PANDA EXPRESS
MINI-MALL - SPACE 115
INGERSOLL STREET
FT BENNING, GA

A-407

ARCHITECTURAL DETAILS

NOT USED 12
SCALE -

NOT USED 9
SCALE -

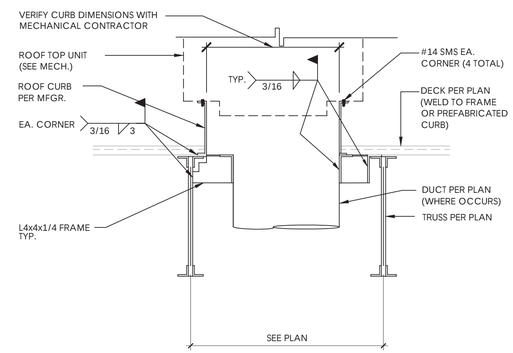

EF ANCHORAGE DETAIL 6
SCALE -

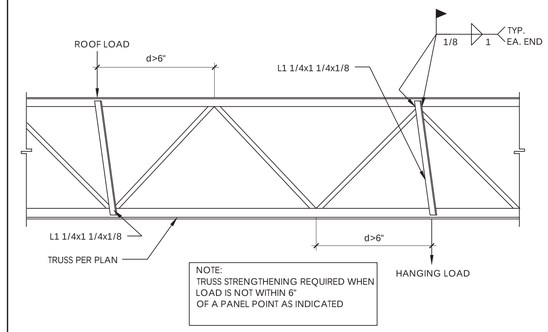

TRUSS STRENGTHENING DETAIL 3
SCALE -

NOT USED 11
SCALE -

NOT USED 8
SCALE -

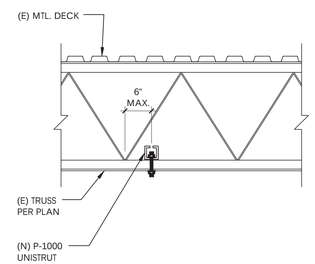

UNISTRUT TO (E) TRUSS 5
SCALE -

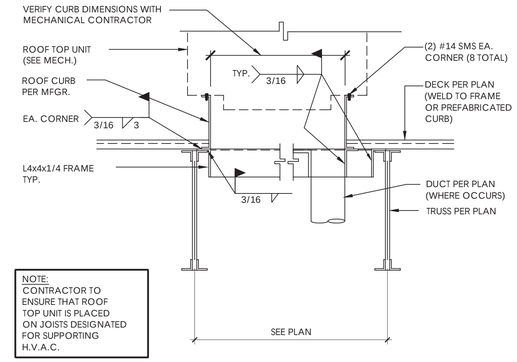

OPENING AT JOIST

OPENING BETWEEN JOISTS

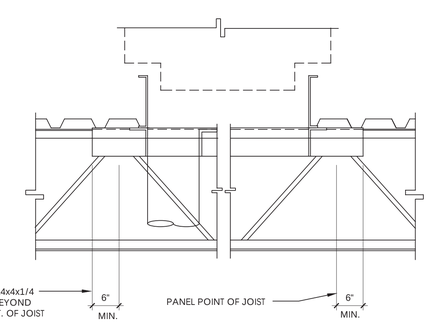

UNIT SUPPORT FRAMING 1
SCALE -

NOT USED 10
SCALE -

ANCHORAGE DETAIL 7
SCALE -

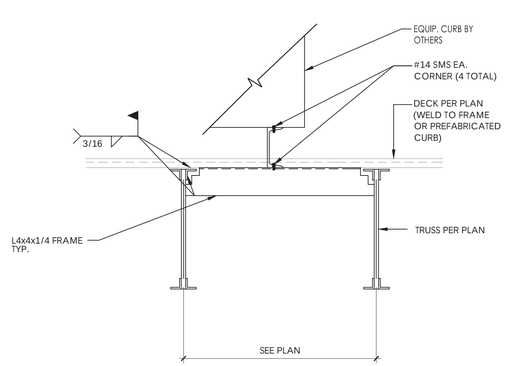

HOOD HANGING DETAIL 4
SCALE -

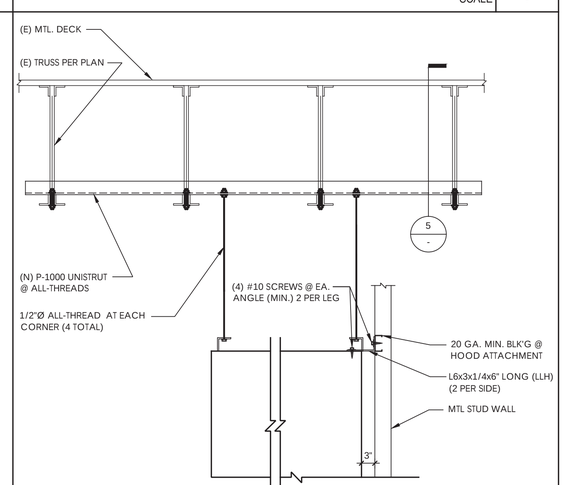

PANDA RESTAURANT GROUP INC.
1683 Walnut Grove Ave.
Rosemead, California
91770
Telephone: 626.799.9898
Facsimile: 626.372.8288

All ideas, designs, arrangement and plans indicated or represented by this drawing are the property of Panda Express Inc. and were created for use on this specific project. None of these ideas, designs, arrangements or plans may be used by or disclosed to any person, firm, or corporation without the written permission of Panda Express Inc.

REVISIONS:

ISSUE DATE:

1	35% SUBMITTAL	04/24/2020
2	95% SUBMITTAL	05/30/2020

DRAWN BY:

PANDA PROJECT #: D7432

GARY WANG
& ASSOCIATES, INC.
1000 Corporate Center Dr., Ste. 550
Monterey Park, CA 91754
TEL: (626) 288-6898 FAX: (626) 768-7101
http://www.garywang.com

LICENSED ARCHITECT GARY H. WANG No. C-32569 REN. 04-30-21 STATE OF CALIFORNIA
05/30/2020

PANDA EXPRESS

MINI-MALL - SPACE 115
INGERSOLLSTREET
FT BENNING, GA

A-408

ROOF SUPPORT DETAILS

BID SET (2020/05/28) NOT FOR CONSTRUCTION

PACKAGED ROOF TOP UNIT SCHEDULE

(CARRIER MODELS TO BE SPECIFIED)
(LO NoX in California)

UNIT SYMBOL		RT 1 (EXISTING)	
LOCATION		ROOF	
BLOWER	CFM	1200 (3.0-TON)	
BLOWER	TSP (IN W.G.)	EXISTING	
COOLING	TOTAL (BTU/HR)	EXISTING	
COOLING	SENSIBLE (BTU/HR)	EXISTING	
COOLING	AMBIENT (F)	EXISTING	
COOLING	COIL ENTERING	EXISTING	
HEATING (KW) :		EXISTING	
ELECTRICAL	POWER SUPPLY	EXISTING	
ELECTRICAL	COMPRESSOR (RLA)	EXISTING	
ELECTRICAL	CONDENSER MOTOR (HP)	EXISTING	
ELECTRICAL	EVAPORATOR MOTOR (HP)	EXISTING	
ELECTRICAL	MIN. CIRCUIT AMPACITY	EXISTING	
		EXISTING 3-TON UNIT TO BE REUSED. VERIFY PROPER OPERATION ON SITE REPAIR/REPLACE AS REQUIRED.	

EXHAUST FAN SCHEDULE

FAN NO.		EF 1	EF 2
LOCATION		ROOF	ROOF
AREA SERVED		KITCHEN GREASE EXHAUST HOOD #1	KITCHEN GREASE EXHAUST HOOD #2
FAN DUTY		AIR EXHAUST	AIR EXHAUST
FAN TYPE		CENTRIFUGAL BELT-DRIVEN	CENTRIFUGAL BELT-DRIVEN
FAN ARRANGEMENT		UPBLAST	UPBLAST
MIN. WHEEL DIAMETER		-	-
PERFORMANCE	C.F.M.	2,875	2,875
PERFORMANCE	T.S.P.	1.25"	1.25"
PERFORMANCE	B.H.P.	1.192	1.192
PERFORMANCE	FAN R.P.M.	1159	1159
MOTOR	MOTOR H.P.	2.0	2.0
MOTOR	ELEC. CHARACTERISTICS	208V/3PH/60HZ	208V/3PH/60HZ
MOTOR	MOTOR R.P.M.	1725	1725
MOTOR	MOTOR SPECIAL FEATURES	OPEN DRIP-PROOF	OPEN DRIP-PROOF
ACCESSORIES		1. VENTED ROOF CURB 2. HINGED AND CHAINED FAN INSTALLATION FOR DUCT ACCESS	1. VENTED ROOF CURB 2. HINGED AND CHAINED FAN INSTALLATION FOR DUCT ACCESS
MANUFACTURER		CAPTIVEAIRE MODEL: EABDU18 WT. 184 LBS	CAPTIVEAIRE MODEL: EABDU18 WT. 184 LBS

NOTES:

1. KITCHEN EXHAUST FANS SHALL BE ELECTRICALLY INTERLOCKED WITH MAKE-UP AIR UNIT AND ROOFTOP UNITS.
2. FOR WIRING DIAGRAM SEE 5/M-501

HVAC CONTROL SETTINGS

EACH HVAC UNIT SHALL BE PROVIDED WITH CONTROLS AS FOLLOWS:

THERMOSTAT: CARRIER COMMERCIAL PROGRAMMABLE THERMOSTAT WITH REMOTE TEMPERATURE SENSOR. SEE SHEET M-100 FOR THERMOSTAT AND SENSOR LOCATIONS.

ALL THERMOSTATS SHALL HAVE MANUAL OVERRIDE.

EACH UNIT CONTROL SHALL BE SET UP INITIALLY AS FOLLOWS:

CONTRACTOR SHALL DETERMINE OCCUPIED PERIOD FROM OWNER.

FAN OPERATION SHALL BE CONTINUOUS DURING OCCUPIED PERIOD AND CYCLE WITH COOLING/HEATING DURING UNOCCUPIED PERIOD.

PROGRAMMED SETPOINTS (FOR EACH THERMOSTAT):
COOLING OCCUPIED: 75°F.
COOLING UNOCCUPIED: 85°F.
HEATING OCCUPIED: 68°F.
HEATING UNOCCUPIED: 50°F.

NOTE: DEVIATIONS FROM THE ABOVE MAY RESULT IN UNACCEPTABLE AIR QUALITY, COMFORT AND/OR ENERGY CONSUMPTION.

MECHANICAL LEGEND

SYMBOL	ABBREVIATION	DESCRIPTION
	ABV	ABOVE
	AFF	ABOVE FINISHED FLOOR
	CLG	CEILING
	DN	DOWN
		DUCT SECTIONS (SUPPLY, EXHAUST, RETURN)
		FLEXIBLE DUCT
	MVD	MANUAL VOLUME DAMPER
	OBD	OPPOSED BLADE DAMPER
	MFR	MANUFACTURER
	MIN	MINIMUM
	OSA	OUTSIDE AIR
		ROUND RIGID DUCTWORK
	TSP	TOTAL STATIC PRESSURE
		TURNING VANES
1		CONSTRUCTION NOTES
EF 1		MECHANICAL EQUIPMENT DESIGNATION
S		SMOKE DETECTOR
T 1		THERMOSTAT / UNIT
R 1		REMOTE SENSOR / UNIT
		NEW-TO-EXISTING CONNECTION

MECHANICAL SPECIFICATIONS

1. WORK INCLUDES INSTALLATION OF HVAC SYSTEMS, INCLUDING GREASE EXHAUST FANS AND MAKE-UP AIR UNIT FOR KITCHEN HOODS, SPACE HEATING/AIR CONDITIONING SYSTEMS, SUPPLY, RETURN, EXHAUST, AND GREASE EXHAUST DUCTWORK, GRILLES, REGISTERS, DIFFUSERS, COMPLETE CONTROLS SYSTEM, INTERLOCK WIRING FOR OPERATION OF KITCHEN HOODS, EXHAUST FANS, AND MAKE-UP AIR UNIT, DUCT INSULATION, AND RELATED ITEMS NECESSARY FOR A COMPLETE FUNCTIONING SYSTEM AS INDICATED ON THE PLANS. FURNISH ALL NEW MATERIALS AND EQUIPMENT UNLESS NOTED OTHERWISE (U.N.O.).
2. DRAWINGS FOR HVAC WORK ARE DIAGRAMMATIC, SHOWING THE GENERAL LOCATION, TYPE, LAYOUT AND REQUIRED EQUIPMENT. DRAWINGS SHALL NOT BE SCALED FOR EXACT MEASUREMENTS. AS REQUIRED, REFER TO ARCHITECTURAL AND MANUFACTURER'S STANDARD INSTALLATION DRAWINGS FOR EQUIPMENT CONNECTIONS AND INSTALLATION REQUIREMENTS. FURNISH AND INSTALL DUCTWORK, CONNECTIONS, ACCESSORIES, OFFSETS, AND MATERIALS NECESSARY TO FACILITATE SYSTEM'S FUNCTIONING AS INDICATED BY THE DESIGN AND EQUIPMENT SHOWN ON PLANS.
3. CODE COMPLIANCE: ALL WORK COVERED BY THIS SECTION SHALL BE IN ACCORDANCE WITH ALL LOCAL CODES AND ACCEPTABLE TO THE AUTHORITY HAVING JURISDICTION.
4. COORDINATE WORK WITH OTHER TRADES, EQUIPMENT FURNISHED BY OTHERS AND OWNER REQUIREMENTS. PROVIDE DUCT RISES AND DROPS AS REQUIRED FOR INSTALLATION AND/OR TRADE COORDINATION. NOTIFY ARCHITECT OF ANY DISCREPANCIES BEFORE STARTING WORK. WORK SHALL BE PERFORMED BY EXPERIENCED TRADESMEN AND THEIR WORK SHALL BE OF HIGH STANDARD ACCEPTABLE TO THE OWNER.
5. DUCTWORK: DUCT SYSTEMS SHALL BE CONSTRUCTED, INSTALLED, SEALED AND INSULATED AS PROVIDED IN THE INT'L ENERGY AND MECHANICAL CODES. SHEET METAL SHALL BE IN ACCORDANCE WITH ASHRAE AND SMACNA STANDARDS. SHEET METAL SHALL BE GALVANIZED OF LOCK-FORMING QUALITY, ASTM A-525. UNLESS OTHERWISE NOTED, DUCT DIMENSIONS ON DRAWINGS ARE NET INSIDE CLEAR DIMENSIONS ON LINED DUCTS OR SHEET METAL DIMENSIONS ON UNLINED DUCTS. ALL ANGLE IRON USED FOR SUPPORT SHALL BE GALVANIZED. ROUND RIGID DUCTWORK SHALL CONFORM TO SMACNA TABLE 3-2.
6. INSTALL DUCT HIGH AS POSSIBLE WITHIN JOIST SPACE. CONSULT ARCHITECT AND ENGINEER FOR ALTERNATE ROUTING IF CONFLICT OCCURS.
7. SEAL ALL TRANSVERSE AND LONGITUDINAL DUCT SEAMS AIR-TIGHT. PROVIDE TURNING VANES AT ALL ELBOWS OR OFFSETS EXCEEDING 30 DEGREES.
8. GREASE EXHAUST SYSTEM: ALL GREASE EXHAUST DUCTS SHALL BE FABRICATED BY WELDED JOINT CONSTRUCTION OF 16 GAUGE WELDED STEEL OR 18 GAUGE STAINLESS STEEL. PROVIDE RATED ACCESS DOORS AT ALL ELBOWS AND OFFSETS NECESSARY FOR COMPLETE CLEANING OF GREASE DUCT. PROVIDE MINIMUM 30"x30" UNOBSTRUCTED ACCESS OR ROUTE FROM THE CEILING TO EACH ACCESS DOOR. DO NOT BLOCK ACCESS WITH PLUMBING, ELECTRICAL OR HVAC OBSTRUCTIONS. ALL ELBOWS SHALL BE LONG RADIUS. GREASE DUCT SHALL BE INSTALLED EITHER IN A RATED ENCLOSURE PROVIDED BY THE GENERAL CONTRACTOR OR WRAPPED WITH FIREMASTER GREASE DUCT WRAP.
9. DUCT INSULATION: PROVIDE DUCT WRAP FOR ALL DUCTS ABOVE CEILING, INCLUDING VERTICAL, HORIZONTAL, RIGID AND FLEXIBLE DUCTS, EXCLUDING PREFABRICATED PREINSULATED DUCTS AND GREASE DUCTS. DUCT WRAP SHALL BE JOHNS MANVILLE MICROLITE OR EQUAL WITH FOIL/SCRIM/KRAFT, 1 IN THICKNESS, 1.5 POUNDS/FT3 DENSITY. DUCT WRAP SHALL BE BONDED GLASS FIBERS IN THERMOSETTING RESIN MEETING NFPA 90A, WITH K VALUE NOT TO EXCEED 0.23 AT 75 DEGREES F. FLAME SPREAD AND SMOKE DEVELOPED RATINGS SHALL NOT EXCEED 25/50. APPLY 100% ADHESIVE COVERAGE TO SHEET METAL DUCTWORK. PROVIDE ADDITIONAL MECHANICAL FASTENERS ON DUCTS OVER 12" WIDE OR 16" HIGH. MECHANICAL FASTENERS SHALL BE "GRIPNAIL" OR WELDED PIN AND SPEED CLIPS SPACED PER SMACNA STANDARDS.
10. FLEX DUCT: PROVIDE FACTORY ASSEMBLED CLASS 1 AIR DUCT (UL 181) WITH FIBERGLASS INSULATION AND REINFORCED OUTER PROTECTIVE COVER/VAPOR BARRIER. FLEX DUCT SHALL MEET NFPA 90A WITH FLAME SPREAD UNDER 25, SMOKE DEVELOPED UNDER 50 AND SHALL BE RATED FOR 2" W.C. PRESSURE AND 0 TO 250 DEGREE TEMPERATURE. FLEX DUCT MAXIMUM ALLOWED LENGTH TO BE PER LOCAL CODE.
11. PROVIDE INSULATION APPLIED TO COMPLETE BACKPAN OF AIR DEVICES.
12. ACCESS DOOR: PROVIDE HINGED ACCESS PANELS IN DUCTWORK WHERE SHOWN AND AS REQUIRED FOR ACCESS TO DAMPERS OR EQUIPMENT. PROVIDE INSULATED ACCESS DOORS IN INSULATED DUCTWORK.
13. AUTOMATIC TEMPERATURE CONTROL: CONTRACTOR TO PROVIDE AND INSTALL 24/7 PROGRAMMABLE THERMOSTATS AND REMOTE SENSORS.
14. KITCHEN HOOD EQUIPMENT INTERLOCK: PROVIDE ALL INTERLOCK AND CONTROL WIRING FOR KITCHEN HOOD SYSTEMS, WHICH INCLUDES EF1, EF2, MAU1 AND ANSUL SYSTEM SHUT DOWN INTERLOCK TO MAKE-UP AIR FAN. UPON ACTIVATION OF ANSUL SYSTEM, MAKE-UP AIR FAN SHALL BE DEACTIVATED. PROVIDE ALL NECESSARY CONTROLS AND WIRING FOR A COMPLETE AND OPERABLE SYSTEM. INTERLOCK GREASE EXHAUST FANS AND MAKE-UP AIR UNIT TO START SIMULTANEOUSLY FROM SWITCH PROVIDED AT HOOD.
15. TEST AND ADJUST EACH PIECE OF EQUIPMENT AND EACH SYSTEM AS REQUIRED TO ASSURE PROPER AIR BALANCE AND OPERATION. PROVIDE A CERTIFIED AIR BALANCE REPORT TO OWNER SHOWING DESIGN AND MEASURED AIR VOLUMES, STATIC PRESSURES, FAN RPMS, ETC. AIR BALANCE CONTRACTOR SHALL ADJUST SYSTEMS TO MINIMIZE NOISE AND VIBRATION, AND TO ASSURE PROPER FUNCTION OF CONTROLS, MAINTENANCE OF TEMPERATURE AND OPERATION. GENERAL CONTRACTOR TO OBTAIN ALL INSPECTIONS REQUIRED BY LOCAL CODE AND GUARANTEE WORK AND INSTALLATION FOR ONE YEAR AFTER ACCEPTANCE BY OWNER. GENERAL CONTRACTOR TO FURNISH OWNER WITH TWO COMPLETE SETS OF AS-BUILT DRAWINGS INDICATING ALL INSTALLED WORK, INCLUDING ALL CONTROL WIRING DIAGRAMS AND INTERLOCK FOR SYSTEM OPERATION.
16. CONTRACTOR SHALL BE RESPONSIBLE FOR INSTALLATION OF ECONOMIZERS INCLUDING INSTALLATION OF ALL NECESSARY SENSORS AND CONNECTIONS TO THERMOSTAT. PROVIDE SUPPORT OF ECONOMIZERS PER MANUFACTURER'S REQUIREMENTS AND TEST FOR PROPER OPERATION PRIOR TO FINAL TEST AND BALANCE.

MAKE-UP AIR UNIT SCHEDULE

MARK	MFR/ MODEL	LOCATION	SERVICE AREA	GAS HEAT	TYPE	COOLING	CFM	ESP	MOTOR	REMARKS
MA-1	CAPTIVEAIRE E3-D.500-G18-MPU	ROOF-TOP	KITCHEN HOOD #1 & #2	239,022	DX COOLED SUPPLY, DOWN DISCHARGE	DUAL CIRCUIT DX COIL (SEE M-402 FOR COOLING INFO)	4,560	0.75"	5.0 HP 208V/3PH/60 HZ	MAKEUP AIR UNIT W/ 3BAUD 10 TON, DUAL CIRCUIT AIR COOLED CONDENSING UNIT. REFER TO SHEET M-402 FOR INFORMATION. 4-5 WEEK LEAD TIME. SHIPPING INCLUDED IN PRICE. SHIPS FROM TYLER, TX. SHIPS SEPARATE, FREIGHT INCLUDED. NOTE: FACTORY OPTIONS SHALL INCLUDE NONCORROSIVE COATING AND HAIL GUARD PROTECTION.

DIFFUSER & GRILLE SCHEDULE

DESIGNATION	MANUFACTURER	MODEL NO	TYPE	COLOR	NOM NECK SIZE	NOM FACE SIZE	FRAME TYPE	NC MAX	REMARKS
A	PRICE	PDMC3-R6	PERFORATED MODULAR CORE	B-12 WHITE	8"Ø	24" x 24"	LAY-IN T-BAR	< 30	ROUND NECK BUTTERFLY VOLUME DAMPER
B	PRICE	PDMC3-AFI	PERFORATED MODULAR CORE	B-12 WHITE	10"Ø	16" x 16"	SURFACE	< 30	ROUND NECK BUTTERFLY VOLUME DAMPER
C	NOT USED								
D	NOT USED								
E	NOT USED								
F	PRICE	PDDR3	PERFORATED RETURN	PA-28 BRONZE	22"X22"	24" x 24"	LAY-IN T-BAR	< 35	
G	NOT USED								
H	NOT USED								
J									
K									

NOTE: PROVIDE FACTORY INSTALLED BACK PAN INSULATION ON AIR DEVICES.
HVAC CONTRACTOR IS TO PURCHASE ALL AIR DEVICES FROM PANDA APPROVED NATIONAL ACCOUNT VENDOR THERMAIR SYSTEMS INC.
PLEASE CONTACT RON CAMPTON AT 602-705-5010 OR EMAIL ronc@thermairsystems.com

AIR BALANCE SCHEDULE

ITEM	SUPPLY AIR	RETURN AIR	MAKE-UP AIR	EXHAUST
MAU1	0	0	+4,560	0
EF-1, EF-2	0	0	0	-2,850 x 2
RTU1 (EXISTING)	+1,200	--840	+360	0
TOTAL	+1,200	-840	+4,920	-5,750

BUILDING PRESSURE = -830 CFM

BALANCE TOLERANCES AS FOLLOWS:
KITCHEN EXHAUST HOODS: 0% TO +10%
OUTDOOR AIR: 0% TO +10%
SUPPLY & RETURN DIFFUSERS: ±10%
TOILET EXHAUST: ±10%
BALANCE RTU SUPPLY AND RETURN PRIOR TO TURNING ON EXHAUST FANS.
KITCHEN EXHAUST FANS SHALL BE BALANCED WITH VELOCITY MATRIX OR A 4" ANEMOMETER

OSA VENTILATION CALCULATION-IMC

AREA TYPE	TOTAL AREA (FT^2)	OCCUPANCY DENSITY ($PEOPLE/FT^2$)	TOTAL OCCUPANTS	OSA REQ.'D PER SQ.FT. (CFM)	OSA REQ.'D PER PERSON (CFM)	OSA REQ.'D FOR THIS OCCUPANCY CLASSIFICATION (CFM)
KITCHEN	657	20/1,000	14	-	15	210

VENTILATION SHALL BE BALANCED BY AN APPROVED METHOD. A BALANCE REPORT SHALL VERIFY THAT THE VENTILATION SYSTEM IS CAPABLE OF SUPPLYING THE AIRFLOW RATES REQUIRED BY SECTION 403. SAID REPORT MUST BE PRESENTED TO THE ADMINISTRATIVE AUTHORITY.

TOTAL OSA REQUIRED (CFM)	210
TOTAL OSA PROVIDED (CFM)	360

BID SET (2020/05/28) NOT FOR CONSTRUCTION

PANDA RESTAURANT GROUP INC.
1683 Walnut Grove Ave.
Rosemead, California
91770
Telephone: 626.799.9898
Facsimile: 626.372.8288

All ideas, designs, arrangement and plans indicated or represented by this drawing are the property of Panda Express Inc. and were created for use on this specific project. None of these ideas, designs, arrangements or plans may be used by or disclosed to any person, firm, or corporation without the written permission of Panda Express Inc.

REVISIONS:

ISSUE DATE:

1	95% SUBMITTAL	05/15/2020

DRAWN BY: MRM

PANDA PROJECT #: D7432
ARCH PROJECT #:

MARSHALL & BOLLWERK ENGINEERING, INC.
8681 Highway 92, Suite 400
Woodstock, Ga. 30189
p: (678) 795-0333, f: (678) 325-4559
e: mbe@mbeinc.net

GEORGIA REGISTERED No.PE038052 PROFESSIONAL ENGINEER MATTHEW R. MERCER
5/15/2020

PANDA EXPRESS
MINI-MALL - SPACE 115
INGERSOLL STREET
FT BENNING, GA

M-000

MECHANICAL NOTES
SPECIFICATIONS & SCHEDULES

MECHANICAL KEY NOTES:

1. INSTALL GREASE EXHAUST HOODS FURNISHED BY PANDA. HOOD SHALL BE ONE CAPTIVEAIRE 4824-ND HOOD EXHAUSTING 2,875 CFM. SUPPORT FROM STRUCTURE ABOVE WITH UNISTRUT AND ALL THREAD ROD. MOUNT HOOD PER LOCAL CODE REQUIREMENTS. REFER TO PLAN FOR HOOD CONNECTIONS. SEE CODE COMPLIANCE DRAWINGS ON SHEET M-500 AND CAPTIVEAIRE HOOD DRAWINGS FOR ADDITIONAL REQUIREMENTS. (TWO SECTIONS TOTAL).
2. NOT USED.
3. MOUNT THERMOSTAT AT MANAGER STATION. REFER TO DETAIL #1 ON SHEET E-200. SEE DWG FOR EXACT LOCATION OF REMOTE SENSOR. SEE ROOFTOP UNIT SCHEDULE AND TEMPERATURE CONTROL DIAGRAM DETAIL 5 ON SHEET M-501 FOR ADDITIONAL INFORMATION.
4. INSTALL GREASE EXHAUST FAN WITH CURB (EF-1 AND EF-2) AND MAKE UP AIR (MA-1) FURNISHED BY PANDA. COORDINATE LOCATION OF UNIT WITH ARCHITECTURAL AND STRUCTURAL DRAWINGS.
5. PROVIDE AND INSTALL A REMOTE SENSOR FOR ROOFTOP UNIT AT THIS LOCATION. MOUNT REMOTE SENSOR IN RETURN AIR DUCTWORK. SEE TEMPERATURE CONTROL DIAGRAM ON SHEET M-501 FOR ADDITIONAL INFORMATION.
6. NOT USED
7. NOT USED
8. CONNECT NEW SA/RA DUCT UP TO EXISTING RTU CONNECTIONS AS REQUIRED
9. PROVIDE FABRICATED CURB PER MANUFACTURERS REQUIREMENTS AND COORDINATE EXACT LOCATION OF UNIT IN FIELD. SHIM ROOF CURB LEVEL FOR PROPER CONDENSATE DRAINAGE.
10. FURNISH AND INSTALL ALL TEMPERATURE CONTROL WIRING FROM THE UNIT TO THE THERMOSTAT OR OTHER CONTROL DEVICES.
11. EXISTING RTU ON ROOF
12. NOT USED
13. NOT USED
14. NOT USED
15. NOT USED
16. 28x10 MAKE-UP AIR CONNECTION TO HOOD. PROVIDE FULL SIZED CONNECTION WITH MVD AND CONNECTION TO MAKE-UP AIR DUCT AS REQ.
17. PROVIDE DUCT EXTERNAL INSULATION WRAP AT TRUNK.
18. NOT USED
19. NOT USED
20. CONTRACTOR TO PROVIDE AND INSTALL ALL NECESSARY REFRIGERANT LINES AND INSULATION FROM CONDENSING UNITS TO SCHEDULED EQUIPMENT. ONCE INSTALLED, CONTRACTOR IS RESPONSIBLE FOR ALL START-UP, TESTING AND CALIBRATION OF EQUIPMENT.
21. PROVIDE AND INSTALL ALL EQUIPMENT WITH MANUFACTURER'S RECOMMENDED CLEARANCES FOR MAINTENANCE. MAINTAIN MINIMUM CLEARANCES TO ELECTRICAL AND SERVICE ACCESS PANELS AND DISCONNECTS.
22. GREASE DUCT CLEANOUT LOCATION. PROVIDE ACCESS TO CLEANOUT ABOVE CEILING. REFER TO MECHANICAL SPECIFICATIONS SHEET M-000
23. 6" CONNECTION TO HOOD RTU SUPPLY PLENUM COLLAR. BALANCE TO 75 CFM.
24. PROVIDE AND INSTALL ACR TUBING, SIZED AND ROUTED PER MANUFACTURER'S INSTRUCTIONS, FROM REMOTE REFRIGERANT CONDENSERS TO WALK-IN COOLER AND FREEZER FAN COILS, AND ICE MAKER. TEST, PURGE, EVACUATE AND CHARGE LINES AS REQUIRED BY MANUFACTURER. (START-UP FOR ICE MAKER IS BY OWNER'S REPRESENTATIVE). ROUTE REFRIGERANT LINES THROUGH "ATR HUB" PROVIDED AND INSTALLED BY GC (REFER TO ARCH. ISO 3 AND 4, SHEET A-108).
25. INSTALL SENSOR ON BACK OF MENU BOARD WALL, AS CLOSE TO CEILING AS POSSIBLE.
26. TRANSITION GREASE DUCT OFF OF HOOD EXHAUST CONNECTION TO EXHAUST FAN ON ROOF AS REQUIRED.
27. 22"X12" EA DUCT UP THRU ROOF

NOTE: MAXIMUM FLEXIBLE DUCT LENGTH ALLOWED SHALL BE PER LOCAL CODE AND AMENDMENTS. IMC HAS NO LIMITATIONS FOR FLEXIBLE DUCT LENGTHS.

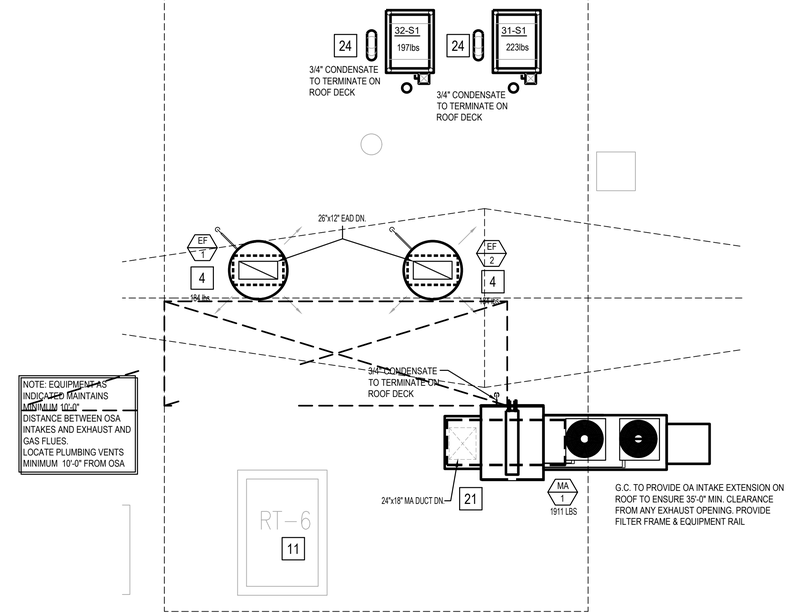

HVAC ROOF PLAN | 1
Scale:1/4"=1'-0" | M-100

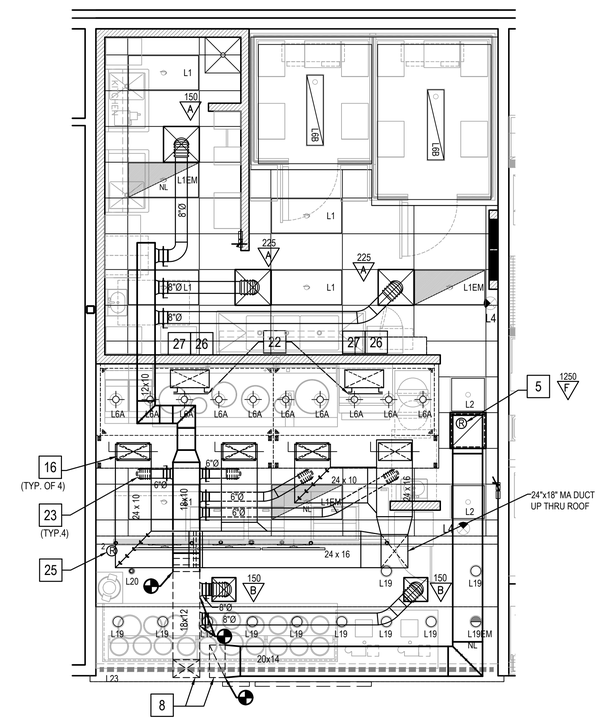

HVAC FLOOR PLAN | 2
Scale:1/4"=1'-0" | M-100

PANDA EXPRESS CHINESE KITCHEN

PANDA RESTAURANT GROUP INC.
1683 Walnut Grove Ave.
Rosemead, California
91770
Telephone: 626.799.9898
Facsimile: 626.372.8288

All ideas, designs, arrangement and plans indicated or represented by this drawing are the property of Panda Express Inc. and were created for use on this specific project. None of these ideas, designs, arrangements or plans may be used by or disclosed to any person, firm, or corporation without the written permission of Panda Express Inc.

REVISIONS:

ISSUE DATE:

1	95% SUBMITTAL	05/15/2020

DRAWN BY: MRM

PANDA PROJECT #: D7432
ARCH PROJECT #:

MARSHALL & BOLLWERK ENGINEERING, INC.
8681 Highway 92, Suite 400
Woodstock, Ga. 30189
p: (678) 795-0333, f: (678) 325-4559
e: mbe@mbeinc.net

GEORGIA REGISTERED No.PE038052 PROFESSIONAL ENGINEER MATTHEW R. MERKER
5/15/2020

BID SET (2020/05/28) NOT FOR CONSTRUCTION

PANDA EXPRESS

MINI-MALL - SPACE 115
INGERSOLL STREET
FT BENNING, GA

M-100

H.V.A.C. FLOOR PLAN &
H.V.A.C. ROOF PLAN

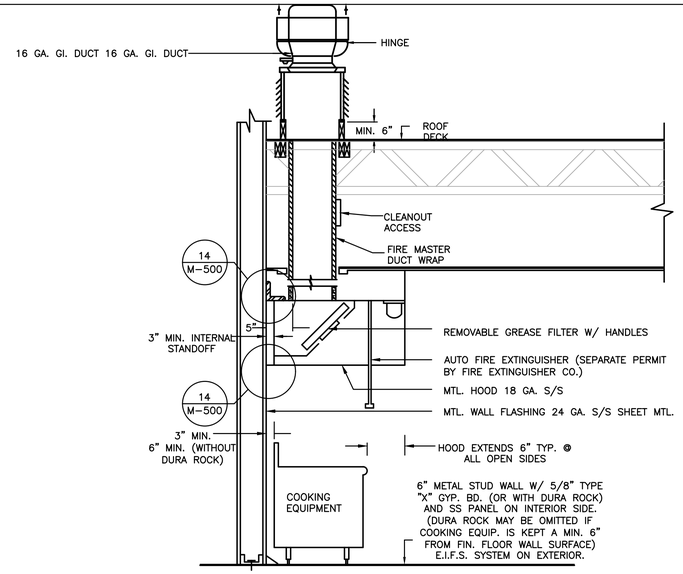

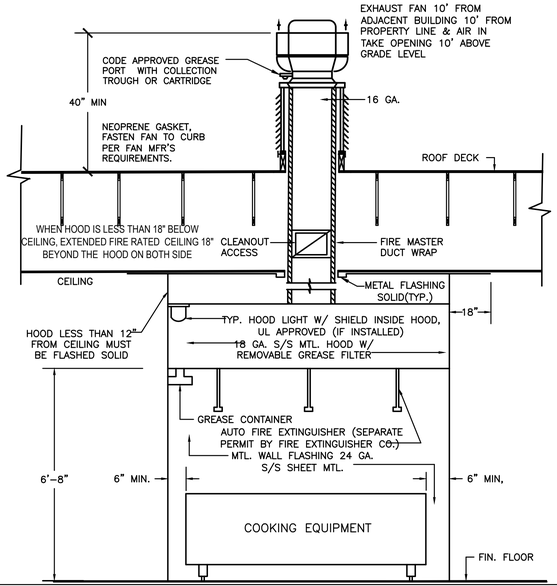

HOOD SECTIONS 18

Scale: NO SCALE M-500

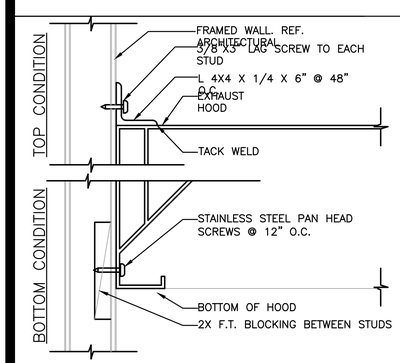

HOOD CLIP AT WALL 14

Scale: NO SCALE M-500

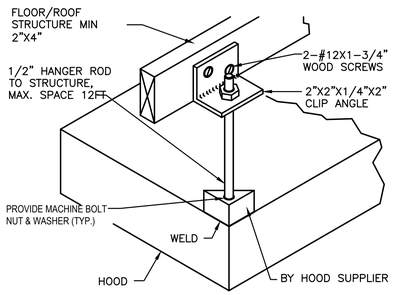

HOOD SUPPORT AT TRUSS 13

Scale: NO SCALE M-500

PERFORMANCE TEST FOR LISTED MECHANICAL HOOD IS REQUIRED PER UMC 509.11

GREASE HOOD SYSTEM CALCULATION

1. TYPE : CANOPY TYPE I, STAINLESS STEEL 18 GAUGE,
2. COOKING EQUIPMENT: (2) CHINESE RANGE, (2) DEEP FRYER, RICE COOKER
3. SIZE: 24'-7" x 4'-0" + 12'-10" MAKEUP AIR PLENUM
4. MIN. REQ'D CAPACITY CFM: (2) U.L. LISTED HOOD @ 2,875 CFM EACH
5. PROPOSED (2) EXHAUST FAN & (1) MAKE-UP AIR UNIT. EF1 & EF2 (2,875 CFM EACH); MAU1 (4,600 CFM, 80% OF EXHAUST)
6. EXHAUST DUCT SIZE: 22"X12"
7. EXHAUST VELOCITY @ EXHAUST DUCT 2,875/(22"x12"/144)= 1568 FPM 1500FPM < 1612 FPM < 2500FPM
8. EXHAUST FAN (EF1 & EF2) AND MAKE-UP AIR UNIT (MAU1) SHALL BE ELECTRICALLY INTERLOCKED
9. FOR CODE COMPLIANCE SEE DETAIL
10. FOR FILTER INFORMATION SEE CAPTIVEAIRE DWG #M-400.
11. INTERLOCK RTU FANS TO OPERATE WITH KEF'S FOR MAKEUP AIR.

INFORMATIONAL GUIDE FOR COMMERCIAL COOKING HOODS

1. STAINLESS STEEL TO BE NO. 18 U.S. GAGE.
2. WHEN GUTTERS ARE PROVIDED THEY SHALL DRAIN TO A COLLECTING PAN WHICH IS READILY ACCESSIBLE FOR CLEANING
3. SEE TABLE 507.11 FOR MINIMUM DISTANCE BETWEEN LOWER EDGE OF GREASE FILTER AND THE COOKING OR HEATING SURFACE.
4. GREASE FILTERS SHALL BE OF STEEL CONSTRUCTION AND READILY ACCESSIBLE FOR CLEANING.
5. ALL JOINTS AND SEAMS SHALL BE GREASE TIGHT.
6. HOODS SHALL BE SECURELY FASTENED IN PLACE BY INCOMBUSTIBLE SUPPORTS.

NOTES

1. PROVIDE ADEQUATE CLEANOUT OPENINGS FOR THOROUGH CLEANING OF DUCT SYSTEM.
2. PROVIDE ADEQUATE MAKE-UP AIR FOR PROPER OPERATION.
3. PROVIDE A SEPARATE DUCT SYSTEM FOR EACH HOOD.
4. THICKNESS OF DUCTS SHALL BE:

DUCT AREA	U.S. GAGE STEEL
UP TO 4 SQ. FT.	16 GA
OVER 4 SQ. FT.	14 GA

5. WELD OR BRAZE ALL DUCT JOINTS AND SEAMS ON THE EXTERNAL SURFACE.
6. SUPPORT THE DUCTS AS REQUIRED. DO NOT PENETRATE DUCT WALLS WITH SCREWS, NAILS, ETC.
7. SECTIONS OF DUCT SHALL NOT CONTAIN GREASE POCKETS.

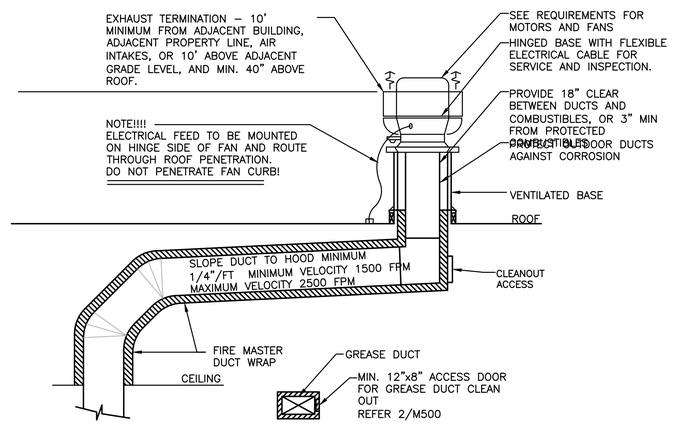

HOOD VENTILATION AND SECTION 5

Scale: NO SCALE M-500

CLEAN OUT DOOR DETAIL
N.T.S.

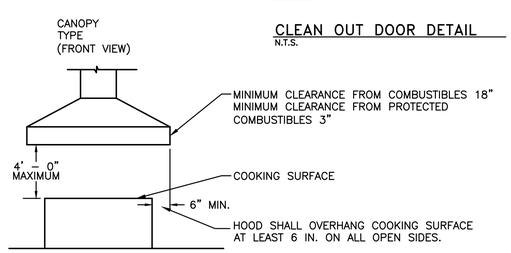

(FOR REFERENCE ONLY)

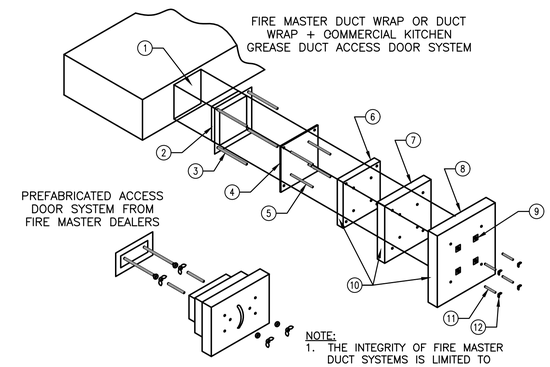

NOTE:
1. THE INTEGRITY OF FIRE MASTER DUCT SYSTEMS IS LIMITED TO THE QUALITY OF THE INSTALLATION.
2. REFER TO ICC EVALUATION REPORT 9424E.

FIRE MASTER DUCT WRAP or DUCT WRAP+	
1	DOOR HOLE
2	ACCESS FRAME WELDED TO DUCT
3	1/4" DIA. ALL THREAD RODS
4	ACCESS COVER – 16 GAUGE
5	INSULATION PINS – WELDED
6	ONE LAYER FIRE MASTER DUCT WRAP or DUCT WRAP +
7	ONE LAYER FIRE MASTER DUCT WRAP or DUCTWRAP + 1" OVERLAP
8	ONE LAYER FIRE MASTER DUCT WRAP or DUCTWRAP + 1" OVERLAP
9	SPEED CLIPS
10	ALUMINUM TAPE AT EDGES
11	SPOOL PIECES FOR THREADED RODS
12	1/4" DIA. WING NUTS

GREASE DUCT ACCESS DOOR 2

M-500

NOTE:
GREASE EXHAUST DUCT INSULATION TYPE FIRE MASTER FASTWRAP+ + SILICON SEALANT APPROVED FOR 2-HOUR STRUCTURE.

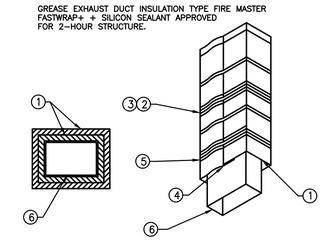

LEGEND	
1	TWO LAYERS FIRE MASTER FASTWRAP+
2	FILAMENT TAPE
3	BANDING
4	3-INCH PERIMETER OVERLAP
5	3-INCH LONGITUDINAL OVERLAP
6	GREASE DUCT

FOR SI: 1 INCH=25.4 MM UL # YYET-R14229

FIGURE 2-HOUR FIRE-RESISTIVE PROTECTION SYSTEM FOR GREASE DUCTS

2 HOUR GREASE DUCT WRAP 1

Scale: NO SCALE M-500

PANDA RESTAURANT GROUP INC.
1683 Walnut Grove Ave.
Rosemead, California
91770
Telephone: 626.799.9898
Facsimile: 626.372.8288

All ideas, designs, arrangement and plans indicated or represented by this drawing are the property of Panda Express Inc. and were created for use on this specific project. None of these ideas, designs, arrangements or plans may be used by or disclosed to any person, firm, or corporation without the written permission of Panda Express Inc.

REVISIONS:

ISSUE DATE:

1	95% SUBMITTAL	05/15/2020

DRAWN BY: MRM

PANDA PROJECT #: D7432

ARCH PROJECT #:

MARSHALL & BOLLWERK ENGINEERING, INC.
8681 Highway 92, Suite 400
Woodstock, Ga. 30188
p: (678) 795-0333, f: (678) 325-4559
e: mbe@mbeinc.net

GEORGIA REGISTERED No.PE038052 PROFESSIONAL ENGINEER MATTHEW R. MENCER 5/15/2020

BID SET (2020/05/28) NOT FOR CONSTRUCTION

PANDA EXPRESS

MINI-MALL - SPACE 115
INGERSOLL STREET
FT BENNING, GA

M-500

HOOD DETAIL PLAN

-	20	-	16
Scale: NO SCALE	M-501	Scale: NO SCALE	M-501
-	19	-	15
Scale: NO SCALE	M-501	Scale: NO SCALE	M-501
-	18	-	14
Scale: NO SCALE	M-501	Scale: NO SCALE	M-501
-	17	-	13
Scale: NO SCALE	M-501	Scale: NO SCALE	M-501

SEQUENCE OF OPERATIONS:
UPON ACTIVATION OF THE KITCHEN HOOD ANSUL SYSTEM, THE DRY CONTACT WITHIN THE HOOD CONTROL PANEL SHALL OPEN AND SEND A CONTROL SIGNAL FOR ROOFTOP UNIT SHUTDOWN. SHUTDOWN SHALL OCCUR VIA AN ISOLATION RELAY TO THE (3) ROOFTOP UNITS SUPPLYING MAKE-UP AIR TO THE HOOD. E.C. TO PROVIDE CABINET, RELAY, TRANSFORMER AND ALL NECESSARY CONDUIT AND WIRING IN ORDER TO PROVIDE A, COMPLETE, FULLY FUNCTIONING SYSTEM.

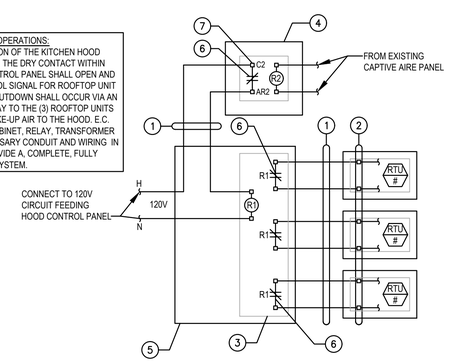

LEGEND

1. (2) #12 CONTROL WIRES IN 1/2" CONDUIT BY E.C.
2. M.C. TO CONNECT INTO REMOTE UNIT SHUTDOWN TERMINAL ON CARRIER ROOFTOP UNIT CONTROL BOARD AND REMOVE JUMPER. REFER TO MANUFACTURER FOR ADDITIONAL INFORMATION.
3. DPDT 120V RATED RELAY BY E.C. ENERGIZE FOR FAILSAFE OPERATION.
4. HOOD CONTROL PANEL AT KITCHEN.
5. 12X12X6 NEMA 1 CABINET MOUNTED ON WALL ADJACENT TO KITCHEN HOOD BY E.C.
6. N.O. DRY CONTACT (SHOWN ENERGIZED) THAT OPENS IN FIRE CONDITIONS.
7. 120V RATED DRY CONTACT WITHIN CAPTIVE AIRE PANEL.

RTU CONTROL WIRING DIAGRAM 5

-	7	-	4
Scale: NO SCALE	M-501	Scale: NO SCALE	M-501

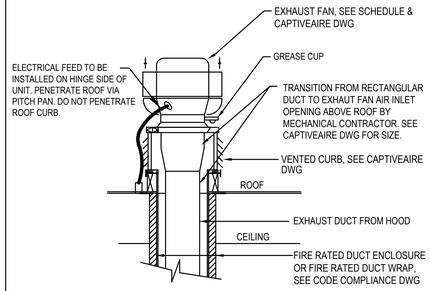

GREASE EXHAUST FAN DETAIL 3

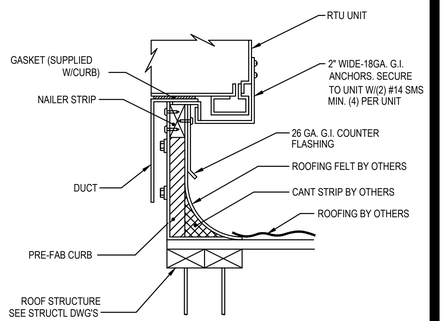

RTU UNIT CURB DETAIL 2

-	4	-	1
Scale: NO SCALE	M-501	Scale: NO SCALE	M-501

PANDA RESTAURANT GROUP INC.
1683 Walnut Grove Ave.
Rosemead, California
91770
Telephone: 626.799.9898
Facsimile: 626.372.8288

All ideas, designs, arrangement and plans indicated or represented by this drawing are the property of Panda Express Inc. and were created for use on this specific project. None of these ideas, designs, arrangements or plans may be used by or disclosed to any person, firm, or corporation without the written permission of Panda Express Inc.

REVISIONS:

ISSUE DATE:

1	95% SUBMITTAL	05/15/2020

DRAWN BY: MRM

PANDA PROJECT #: D7432
ARCH PROJECT #:

MARSHALL & BOLLWERK ENGINEERING, INC.
8681 Highway 92, Suite 400
Woodstock, Ga. 30189
p: (678) 795-0333, f: (678) 325-4559
e: mbe@mbeinc.net

GEORGIA REGISTERED No.PE038052 PROFESSIONAL ENGINEER MATTHEW R. MEKEEL
5/15/2020

BID SET (2020/05/28) NOT FOR CONSTRUCTION

PANDA EXPRESS

MINI-MALL - SPACE 115
INGERSOLL STREET
FT BENNING, GA

M-501

HOOD DETAIL PLAN

HOOD INFORMATION – Job#4333908

HOOD NO.	TAG	MODEL	LENGTH	MAX. COOKING TEMP.	TYPE	APPLIANCE DUTY	DESIGN CFM/ft	TOTAL EXH. CFM	EXHAUST PLENUM RISER(S) WIDTH	LENG.	HEIGHT	DIA.	CFM	VEL.	S.P.	MUA CFM	AC CFM	HOOD CONSTRUCTION	HOOD CONFIG. END TO END	ROW
1		4824 ND-2-ACPSP-F	9' 6"	600 Deg.	I	Heavy	300	2850	12"	22"	4"		2850	1555	-0.481"	2280	428	430 SS Where Exposed	LEFT	ALONE
2		4824 ND-2-ACPSP-F	9' 6"	600 Deg.	I	Heavy	300	2850	12"	22"	4"		2850	1555	-0.481"	2280	428	430 SS Where Exposed	RIGHT	ALONE

PATENT NUMBERS

AC-PSP (United States) – US Patent 7963830 B2
AC-PSP Wall (Canada) – CA Potent 2820509
AC-PSP Island (Canada) – CA Potent 2520330

HOOD INFORMATION

HOOD NO.	TAG	FILTER(S) TYPE	QTY.	HEIGHT	LENGTH	EFFICIENCY @ 7 MICRONS	LIGHT(S) QTY.	TYPE	WIRE GUARD	UTILITY CABINET(S) LOCATION	SIZE	FIRE SYSTEM TYPE	FIRE SYSTEM SIZE	ELECTRICAL MODEL #	SWITCHES QUANTITY	FIRE SYSTEM PIPING	HOOD HANGING WGHT
1		SS Baffle with Handles	7	20"	16"	30%	5	L55 Series E26	NO							YES	513 LBS
2		SS Baffle with Handles	7	20"	16"	30%	5	L55 Series E26	NO	Wall Mnt	12"x54"x24"	Ansul R102	3.0/3.0	SC-321110MA-SEP	1 Light 1 Fan	YES	511 LBS

HOOD OPTIONS

HOOD NO.	TAG	OPTION
1		LEFT END STANDOFF 3" Wide 48" Long

PERFORATED SUPPLY PLENUM(S)

HOOD NO.	TAG	POS.	LENGTH	WIDTH	HEIGHT	TYPE	RISER(S) WIDTH	LENG.	DIA.	CFM	S.P.
1		Front	117"	22"	6"	MUA	10"	28"		1140	0.484"
						MUA	10"	28"		1140	0.484"
						AC			8"	214	0.112"
						AC			8"	214	0.112"
2		Front	114"	22"	6"	MUA	10"	28"		1140	0.484"
						MUA	10"	28"		1140	0.484"
						AC			8"	214	0.112"
						AC			8"	214	0.112"

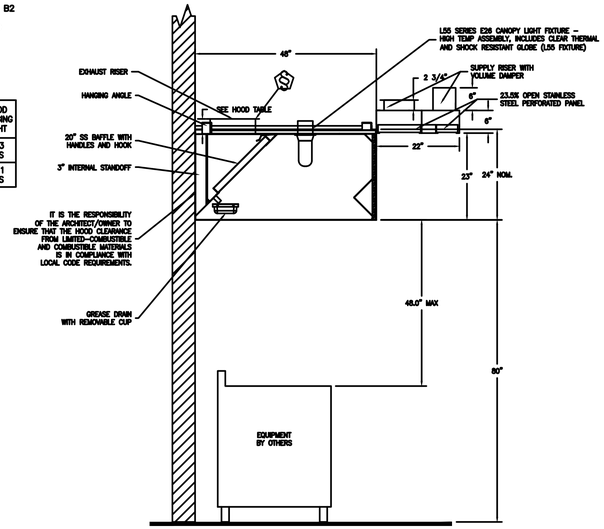

SECTION VIEW – MODEL 4824ND-2-ACPSP-F HOOD – #1

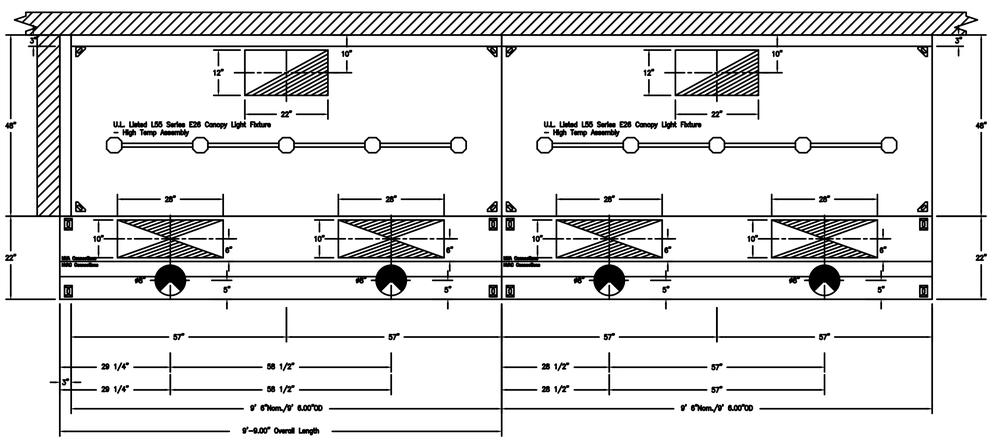

PLAN VIEW – Hood #1
9' 6.00" LONG 4824ND-2-ACPSP-F

ACPSP ships loose for field installation

PLAN VIEW – Hood #2
9' 6.00" LONG 4824ND-2-ACPSP-F

ACPSP ships loose for field installation

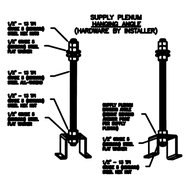

ASSEMBLY INSTRUCTIONS

HANGING ANGLE MUST BE SUPPORTED WITH 1/2" – 13 TPI GRADE 5 (MINIMUM) ALL-THREAD. SANDWICH HANGING ANGLES AND CEILING ANCHOR POINTS WITH 1/2" GRADE 5 (MINIMUM) STEEL FLAT WASHERS AND 1/2" – 13 TPI GRADE 5 (MINIMUM) HEX NUTS AS SHOWN. MUST USE DOUBLED HEX NUT CONFIGURATION ABOVE CEILING ANCHORS. SINGLE HEX NUT BENEATH HANGING ANGLE IS ACCEPTABLE FOR PSP HANGING ANGLES. MAINTAIN 1/4" OF EXPOSED THREADS BENEATH BOTTOM HEX NUT. TORQUE ALL HEX NUTS TO 57 FT-LBS.

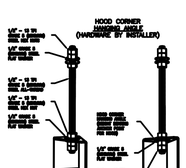

ASSEMBLY INSTRUCTIONS

HANGING ANGLE MUST BE SUPPORTED WITH 1/2" – 13 TPI GRADE 5 (MINIMUM) ALL-THREAD. SANDWICH HANGING ANGLES AND CEILING ANCHOR POINTS WITH 1/2" GRADE 5 (MINIMUM) STEEL FLAT WASHERS AND 1/2" – 13 TPI GRADE 5 (MINIMUM) HEX NUTS AS SHOWN. MUST USE DOUBLED HEX NUT CONFIGURATION BENEATH HOOD HANGING ANGLES AND ABOVE CEILING ANCHORS. MAINTAIN 1/4" OF EXPOSED THREADS BENEATH BOTTOM HEX NUT. TORQUE ALL HEX NUTS TO 57 FT-LBS.

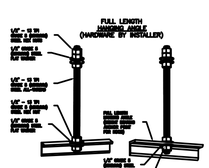

ASSEMBLY INSTRUCTIONS

HANGING ANGLE MUST BE SUPPORTED WITH 1/2" – 13 TPI GRADE 5 (MINIMUM) ALL-THREAD. SANDWICH HANGING ANGLES AND CEILING ANCHOR POINTS WITH 1/2" GRADE 5 (MINIMUM) STEEL FLAT WASHERS AND 1/2" – 13 TPI GRADE 5 (MINIMUM) HEX NUTS AS SHOWN. MUST USE DOUBLED HEX NUT CONFIGURATION ABOVE CEILING ANCHORS. SINGLE HEX NUT BENEATH HANGING ANGLE IS ACCEPTABLE FOR FULL LENGTH HANGING ANGLES. MAINTAIN 1/4" OF EXPOSED THREADS BENEATH BOTTOM HEX NUT. TORQUE ALL HEX NUTS TO 57 FT-LBS.

NOTE: UNLESS OTHERWISE STATED, PANDA RESTAURANT GROUP SHALL PROVIDE ALL EQUIPMENT ON THE FOLLOWING CAPTIVEAIRE SHEETS, INCLUDING: HOODS, FIRE SYTEM, EXHAUST FANS, SUPPLY FAN, BATHROOM FAN AND ELECTRICAL INTERLOCK PACKAGE

ANSUL GAS VALVE:

THE ANSUL GAS VALVE IS PROVIDED BY CAPTIVEAIRE SYSTEMS. CONTACT OUR OFFICE WITH THE VALVE SIZE 3 DAYS IN ADVANCE OF WHEN IT IS NEEDED ON SITE.

FOR QUESTIONS CALL THE
CAPTIVEAIRE
SOUTHERN CALIFORNIA OFFICE
STONE MILL DESIGN CENTER
2915 RED HILL AVE, SUITE C106
COSTA MESA, CA 92626
TEL: 800-967-7701 EMAIL: REDESIGN@CAPTIVEAIRE.COM

REVISIONS

	DESCRIPTION	DATE
1		
2		
3		
4		

CAPTIVEAIRE
Southern California Office
3002 Dow Ave., Suite 410, Tustin, CA. 92780 PHONE: (714) 957-1500 FAX: (919) 227-5975 EMAIL: rep86@captiveaire.com
www.captiveaire.com

Panda Express – Fort Benning GA (D7432)
Ingersoll Street,Mini-Mall – Space 115
FORT BENNING, GA, 31905

DATE: 4/23/2020
DWG.#: 4333908
DRAWN BY: AH-86
SCALE: 3/4" = 1'-0"
MASTER DRAWING
SHEET NO. 1

HOOD DETAIL PLAN
FOR REFERENCE ONLY

PANDA EXPRESS CHINESE KITCHEN

PANDA RESTAURANT GROUP INC.
1683 Walnut Grove Ave.
Rosemead, California
91770
Telephone: 626.799.9898
Facsimile: 626.372.8288

All ideas, designs, arrangement and plans indicated or represented by this drawing are the property of Panda Express Inc. and were created for use on this specific project. None of these ideas, designs, arrangements or plans may be used by or disclosed to any person, firm, or corporation without the written permission of Panda Express Inc.

REVISIONS:

ISSUE DATE:

1	95% SUBMITTAL	05/15/2020

DRAWN BY: MRM

PANDA PROJECT #: D7432
ARCH PROJECT #:

MARSHALL & BOLLWERK ENGINEERING, INC.
8681 Highway 92, Suite 400
Woodstock, Ga. 30189
p: (678) 795-0333, f: (678) 325-4559
e: mbe@mbeinc.net

BID SET (2020/05/28) NOT FOR CONSTRUCTION

PANDA EXPRESS
MINI-MALL - SPACE 115
INGERSOLL STREET
FT BENNING, GA

H-000

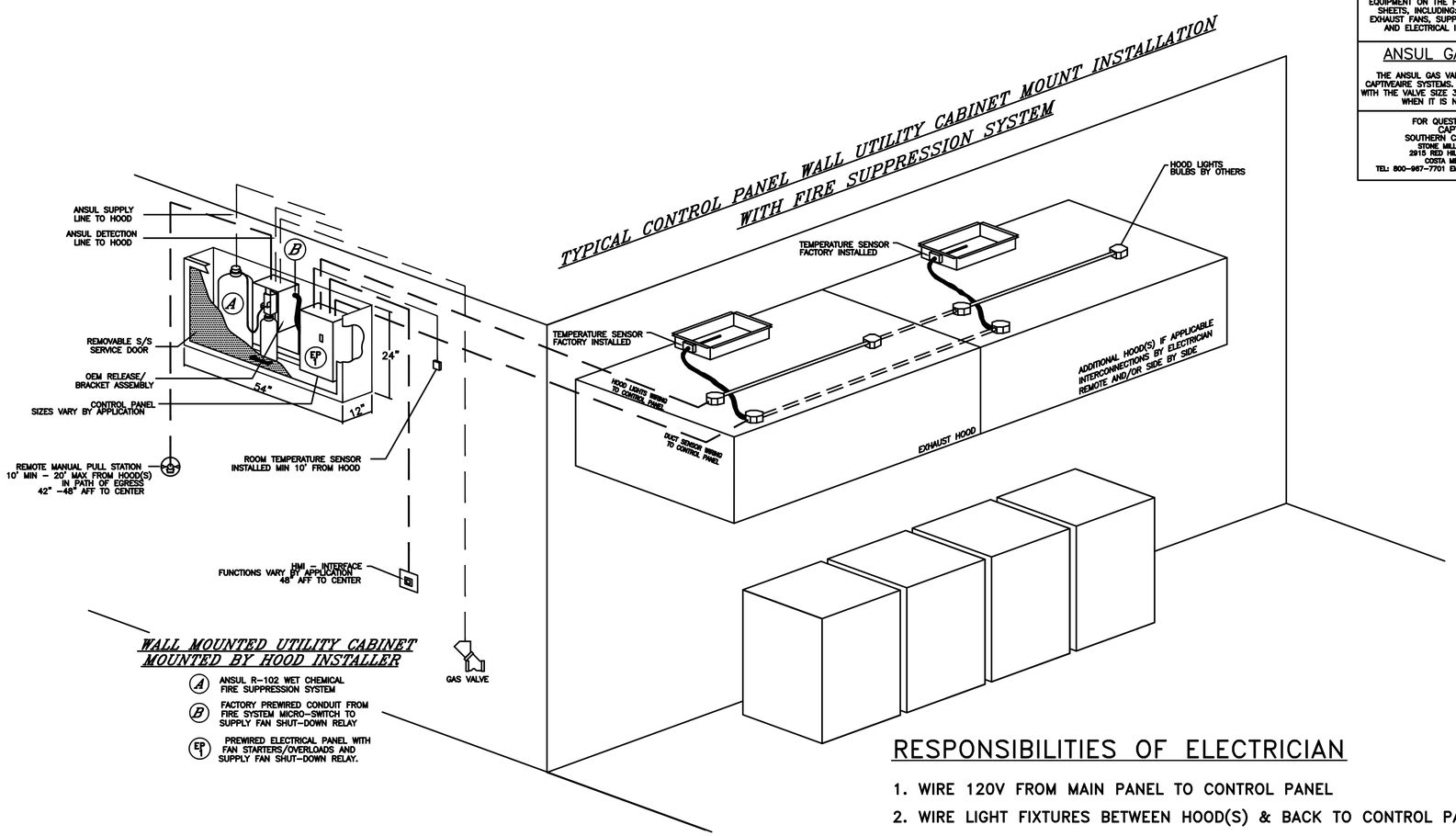

WALL MOUNTED UTILITY CABINET MOUNTED BY HOOD INSTALLER

- (A) ANSUL R-102 WET CHEMICAL FIRE SUPPRESSION SYSTEM
- (B) FACTORY PREWIRED CONDUIT FROM FIRE SYSTEM MICRO-SWITCH TO SUPPLY FAN SHUT-DOWN RELAY
- (EP) PREWIRED ELECTRICAL PANEL WITH FAN STARTERS/OVERLOADS AND SUPPLY FAN SHUT-DOWN RELAY.

TERMINAL BLOCK WIRING DETAILS CAN BE FOUND ON ELECTRICAL WIRING DIAGRAMS

NOTE: UNLESS OTHERWISE STATED, PANDA RESTAURANT GROUP SHALL PROVIDE ALL EQUIPMENT ON THE FOLLOWING CAPTIVEAIRE SHEETS, INCLUDING: HOODS, FIRE SYTIEM, EXHAUST FANS, SUPPLY FAN, BATHROOM FAN AND ELECTRICAL INTERLOCK PACKAGE

ANSUL GAS VALVE:

THE ANSUL GAS VALVE IS PROVIDED BY CAPTIVEAIRE SYSTEMS. CONTACT OUR OFFICE WITH THE VALVE SIZE 3 DAYS IN ADVANCE OF WHEN IT IS NEEDED ON SITE.

FOR QUESTIONS CALL THE
CAPTIVEAIRE
SOUTHERN CALIFORNIA OFFICE
STONE MILL DESIGN CENTER
2915 RED HILL AVE, SUITE C106
COSTA MESA, CA 92626
TEL: 800-967-7701 EMAIL: RED86@CAPTIVEAIRE.COM

RESPONSIBILITIES OF ELECTRICIAN

1. WIRE 120V FROM MAIN PANEL TO CONTROL PANEL
2. WIRE LIGHT FIXTURES BETWEEN HOOD(S) & BACK TO CONTROL PANEL
3. WIRE TEMPERATURE SENSOR(S) FROM EXHAUST COLLARS TO CONTROL PANEL
4. MOUNT & WIRE ROOM SENSOR TO CONTROL PANEL
5. WIRE FAN POWER FROM MAIN PANEL THROUGH CONTROL PANEL TO FAN(S)
6. WIRE SHUNT COIL TO CONTROL PANEL
7. WIRE GAS VALVE (IF APPLICABLE) TO CONTROL PANEL (120V FROM CONTROL PANEL)

ADDITIONAL RESPONSIBILITIES IF APPLICABLE

1. IF MULTIPLE FIRE SYSTEMS ON SINGLE CONTROL PANEL, THE FOLLOWING MUST OCCUR
   A. ANSUL AUTOMAN MICROSWITCHES TO BE WIRED IN SERIES BACK TO CONTROL PANEL
   B. ANSUL CATRIDGE MICROSWITCHES TO BE WIRED IN SERIES BACK TO CONTROL PANEL

RESPONSIBILITIES OF ALARM CONTRACTOR

1. WIRE ANSUL ALARM MICROSWITCH TO BUILDING ALARM PANEL

REVISIONS

DESCRIPTION	DATE

CAPTIVEAIRE
www.captiveaire.com
Southern California Office
3002 Dow Ave., Suite 410, Tustin, CA. 92780 PHONE: (714) 957-1500 FAX: (919) 227-5975 EMAIL: rsg98@captiveaire.com

Panda Express – Fort Benning GA (D7432)
Ingersoll Street,Mini–Mall – Space 115
FORT BENNING, GA, 31905

DATE: 4/23/2020
DWG.#: 4333908
DRAWN BY: AH–86
SCALE: 3/4" = 1'–0"
MASTER DRAWING
SHEET NO. 2

HOOD DETAIL PLAN
FOR REFERENCE ONLY

PANDA EXPRESS CHINESE KITCHEN

PANDA RESTAURANT GROUP INC.
1683 Walnut Grove Ave.
Rosemead, California
91770
Telephone: 626.799.9898
Facsimile: 626.372.8288

All ideas, designs, arrangement and plans indicated or represented by this drawing are the property of Panda Express Inc. and were created for use on this specific project. None of these ideas, designs, arrangements or plans may be used by or disclosed to any person, firm, or corporation without the written permission of Panda Express Inc.

REVISIONS:

ISSUE DATE:

1	95% SUBMITTAL	05/15/2020

DRAWN BY: MRM

PANDA PROJECT #: D7432
ARCH PROJECT #:

MARSHALL & BOLLWERK ENGINEERING, INC.
8881 Highway 92, Suite 400
Woodstock, Ga. 30189
p: (678) 795-0333, f: (678) 325-4558
e: mbe@mbeinc.net

BID SET (2020/05/28) NOT FOR CONSTRUCTION

PANDA EXPRESS
MINI-MALL - SPACE 115
INGERSOLL STREET
FT BENNING, GA

H-001

EXHAUST FAN INFORMATION – Job#4333908

FAN UNIT NO.	TAG	FAN UNIT MODEL #	CFM	ESP.	RPM	H.P.	B.H.P.	ø	VOLT	FLA	DISCHARGE VELOCITY	WEIGHT (LBS.)	SONES
1		EABDU18	2850	1.250	1142	2.000	1.1420	3	208	5.9	658 FPM	184	14
2		EABDU18	2850	1.250	1142	2.000	1.1420	3	208	5.9	658 FPM	184	14

CONDENSER DETAILS

FAN UNIT NO.	TAG	FAN UNIT MODEL #	CONDENSER NO.	TONNAGE	VOLTAGE	PHASE	FREQUENCY	MCA	RLA	MAX. FUSE SIZE	MIN. WIRE SIZE	SEER
3		EA3-D.500-G18-MPU	1	5	208-230	3 PHASE	60 Hz	21.4 Amps	17.4 Amps	30 Amps	10 AWG	14
			2	5	208-230	3 PHASE	60 Hz	21.4 Amps	17.4 Amps	30 Amps	10 AWG	14

MUA FAN INFORMATION – Job#4333908

FAN UNIT NO.	TAG	FAN UNIT MODEL #	BLOWER	HOUSING	MIN CFM	DESIGN CFM	ESP.	RPM	H.P.	B.H.P.	ø	VOLT	FLA	MCA	MOCP	COOLING COIL ENTERING DB TEMP.	COOLING COIL ENTERING WB TEMP.	COOLING COIL LEAVING DB TEMP.	COOLING COIL LEAVING WB TEMP.	COOLING COIL TOTAL CAPACITY	COOLING COIL SENSIBLE CAPACITY	COOLING COIL LATENT CAPACITY	WEIGHT (LBS.)	SONES
3		EA3-D.500-G18-MPU	G18-PB	A3-D.500	3500	4560	0.750	832	5.000	2.5520	3	208	15.0	18.8A	30A	94.0°F	75.0°F	79.1°F	68.8°F	104.4 MBH	70.0 MBH	34.4 MBH	1911	14.9

GAS FIRED MAKE-UP AIR UNIT(S)

FAN UNIT NO.	TAG	INPUT BTUs	OUTPUT BTUs	TEMP. RISE	REQUIRED INPUT GAS PRESSURE	GAS TYPE	BURNER EFFICIENCY(%)
3		239022	219900	46 deg F	7 in. w.c. – 14 in. w.c.	Natural	92

FAN OPTIONS

FAN UNIT NO.	TAG	OPTION (Qty. – Descr.)
1		1 – Grease Box
		1 – Upblast Fan Wheel Access Port
2		1 – Grease Box
		1 – Upblast Fan Wheel Access Port
3		1 – AC Interlock Relay – 24VAC Coil
		1 – Motorized Backdraft Damper for A3-D Housing
		1 – Low Fire Start
		1 – Inlet Pressure Gauge, 0–35"
		1 – Manifold Pressure Gauge, –5 to 15" wc
		1 – Downturn Plenum for Size 3 DX Coil Module
		1 – Cooling Thermostat and Relay (Not req for evap)
		1 – 10 Ton 2 Circuit (5/5) Modular Packaged Cooling Option for Size 3 DF/EH MUA (3,600 to 6,000 cfm), 208V/230V, 3 phase. Cooling Thermostat or Programmable Stat Required for Proper Operation.
		1 – Separate 120V Wiring Package (Required and used only for DCV or Prewire with VFD) – Three Phase Only

FAN ACCESSORIES

FAN UNIT NO.	TAG	EXHAUST			SUPPLY			
		GREASE CUP	GRAVITY DAMPER	WALL MOUNT	SIDE DISCHARGE	GRAVITY DAMPER	MOTORIZED DAMPER	WALL MOUNT
1		YES						
2		YES						
3							YES	

CURB ASSEMBLIES

NO.	ON FAN	WEIGHT	ITEM	SIZE
1	# 1	38 LBS	Curb	26.500"W x 26.500"L x 24.000"H Vented Hinged
2	# 2	38 LBS	Curb	26.500"W x 26.500"L x 24.000"H Vented Hinged
3	# 3	114 LBS	Rail	6.000"W x 35.000"L x 20.000"H
3	# 3	114 LBS	Curb	35.000"W x 84.000"L x 20.000"H Insulated

FANS #1, #2 – EABDU18 EXHAUST FAN

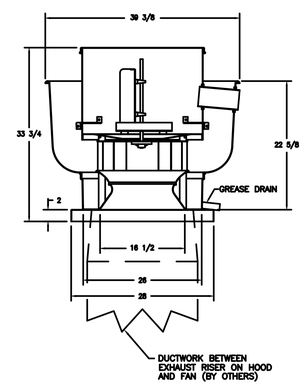

FEATURES:

- ROOF MOUNTED FANS
- RESTAURANT MODEL
- UL705 AND UL762 AND ULC-S645
- AMCA SOUND AND AIR CERTIFIED
- WIRING FROM MOTOR TO DISCONNECT SWITCH
- WEATHERPROOF DISCONNECT
- HIGH HEAT OPERATION 300°F (149°C)
- GREASE CLASSIFICATION TESTING

NORMAL TEMPERATURE TEST
EXHAUST FAN MUST OPERATE CONTINUOUSLY WHILE EXHAUSTING AIR AT 300°F (149°C) UNTIL ALL FAN PARTS HAVE REACHED THERMAL EQUILIBRIUM, AND WITHOUT ANY DETERIORATING EFFECTS TO THE FAN WHICH WOULD CAUSE UNSAFE OPERATION.

ABNORMAL FLARE-UP TEST
EXHAUST FAN MUST OPERATE CONTINUOUSLY WHILE EXHAUSTING BURNING GREASE VAPORS AT 600°F (316°C) FOR A PERIOD OF 15 MINUTES WITHOUT THE FAN BECOMING DAMAGED TO ANY EXTENT THAT COULD CAUSE AN UNSAFE CONDITION.

OPTIONS

GREASE BOX,
UPBLAST FAN WHEEL ACCESS PORT.

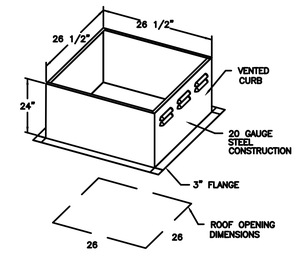

PITCHED CURBS ARE AVAILABLE FOR PITCHED ROOFS.

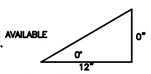

SPECIFY PITCH:
EXAMPLE: 7/12 PITCH = 30° SLOPE

NOTE: UNLESS OTHERWISE STATED, PANDA RESTAURANT GROUP SHALL PROVIDE ALL EQUIPMENT ON THE FOLLOWING CAPTIVEAIRE SHEETS, INCLUDING: HOODS, FIRE SYTEM, EXHAUST FANS, SUPPLY FAN, BATHROOM FAN AND ELECTRICAL INTERLOCK PACKAGE

ANSUL GAS VALVE:

THE ANSUL GAS VALVE IS PROVIDED BY CAPTIVEAIRE SYSTEMS. CONTACT OUR OFFICE WITH THE VALVE SIZE 3 DAYS IN ADVANCE OF WHEN IT IS NEEDED ON SITE.

FOR QUESTIONS CALL THE
CAPTIVEAIRE
SOUTHERN CALIFORNIA OFFICE
STONE MILL DESIGN CENTER
2915 RED HILL AVE, SUITE C106
COSTA MESA, CA 92626
TEL: 800-967-7701 EMAIL: RED56@CAPTIVEAIRE.COM

REVISIONS

DESCRIPTION	DATE

CAPTIVEAIRE
www.captiveaire.com
Southern California Office
3002 Dow Ave., Suite 410, Tustin, CA. 92780 PHONE: (714) 957-1500 FAX: (919) 227-5975 EMAIL: reg86@captiveaire.com

Panda Express – Fort Benning GA (D7432)
Ingersoll Street,Mini-Mall – Space 115
FORT BENNING, GA, 31905

DATE: 4/23/2020

DWG.#: 4333908

DRAWN BY: AH-86

SCALE: 3/4" = 1'-0"

MASTER DRAWING

SHEET NO. 3

HOOD DETAIL PLAN
FOR REFERENCE ONLY

BID SET (2020/05/28) NOT FOR CONSTRUCTION

PANDA EXPRESS
CHINESE KITCHEN

PANDA RESTAURANT GROUP INC.
1683 Walnut Grove Ave.
Rosemead, California
91770
Telephone: 626.799.9898
Facsimile: 626.372.8288

All ideas, designs, arrangement and plans indicated or represented by this drawing are the property of Panda Express Inc. and were created for use on this specific project. None of these ideas, designs, arrangements or plans may be used by or disclosed to any person, firm, or corporation without the written permission of Panda Express Inc.

REVISIONS:

ISSUE DATE:

1	95% SUBMITTAL	05/15/2020

DRAWN BY: MRM

PANDA PROJECT #: D7432
ARCH PROJECT #:

MARSHALL & BOLLWERK ENGINEERING, INC.
8681 Highway 92, Suite 400
Woodstock, Ga. 30189
p: (678) 795-0333, f: (678) 325-4559
e: mbe@mbeinc.net

PANDA EXPRESS

MINI-MALL - SPACE 115
INGERSOLL STREET
FT BENNING, GA

H-002

FAN #3 EA3-0.500-G18-MPU - HEATER
1. DIRECT GAS FIRED HEATED MAKE UP AIR UNIT WITH 18" BLOWER AND 12" BURNER.
2. INTAKE HOOD WITH EZ FILTERS
3. DOWN DISCHARGE - AIR FLOW RIGHT -> LEFT
4. COOLING INTERLOCK RELAY. 24VAC COIL. 120V CONTACTS. LOCKS OUT BURNER CIRCUIT WHEN AC IS ENERGIZED.
5. MOTORIZED BACK DRAFT DAMPER 30" X 30" FOR SIZE 3 STANDARD & MODULAR HEATER UNITS W/EXTENDED SHAFT, STANDARD GALVANIZED CONSTRUCTION, 3/4" REAR FLANGE, LOW LEAKAGE, NFBUR-S ACTUATOR INCLUDED
6. LOW FIRE START. ALLOWS THE BURNER CIRCUIT TO ENERGIZE WHEN THE MODULATION CONTROL IS IN A LOW FIRE POSITION.
7. GAS PRESSURE GAUGE, 0-30", 2.5" DIAMETER, 1/4" THREAD SIZE
8. GAS PRESSURE GAUGE, -5 TO +15 INCHES WC., 2.5" DIAMETER, 1/4" THREAD SIZE
9. DOWNTURN PLENUM FOR SIZE 3 COOLING COIL MODULE - REQUIRED FOR DOWN DISCHARGE COOLING COIL APPLICATIONS
10. DX COOLING INTAKE AIR THERMOSTAT AND RELAYS MOUNTED IN UNIT -- SET POINT FOR THERMOSTAT SHOULD BE 85F.
11. 10 TON, DUAL CIRCUIT (5/5) MODULAR PACKAGED COOLING OPTION FOR SIZE 3 D/EH MODULAR PACKAGED UNIT. INCLUDES CONDENSER, DX COIL, FILTER/DRYER KIT, THERMAL EXPANSION VALVE, R410A REFRIGERANT, AND REFRIGERANT PIPING. (3,000 TO 6,000 CFM) NOT BUILT WITH OPPOSITE SIDE CONTROLS OR OPPOSITE AIRFLOW DIRECTION. CONDENSERS REQUIRE SEPARATE 208V, 3 PHASE POWER SUPPLY UNLESS ORDERED WITH SINGLE POINT CONNECTION. COIL = 2EZ060224
12. SEPARATE 120VAC WIRING PACKAGE FOR MAKE-UP AIR UNITS. OPTION MUST BE SELECTED WHEN MOUNTING VFD IN PREWIRE PANEL OR WITH DCV PACKAGE. PROVIDES SEPARATE 120VAC INPUT TO SUPPLY FAN. THIS 120V SIGNAL MUST BE RUN BY ELECTRICIAN FROM DCV TO MUA SWITCH.

*NOTE: SUPPLY DUCT MUST BE INSTALLED TO MEET SMACNA STANDARDS. A MINIMUM STRAIGHT DUCT LENGTH MUST BE MAINTAINED DOWNSTREAM OF UNIT DISCHARGE AS OUTLINED IN AMCA PUBLICATION 201. DO NOT RELY ON UNIT TO SUPPORT DUCT IN ANY WAY. FAILURE TO PROPERLY SIZE DUCTWORK MAY CAUSE SYSTEM EFFECTS AND REDUCE PERFORMANCE OF THE EQUIPMENT.
SUGGESTED STRAIGHT DUCT SIZE IS 24" x 24"

SUPPLY SIDE HEATER INFORMATION:

WINTER TEMPERATURE = 29°F. TEMP. RISE = 46°F.
BTUs CALCULATED OFF ACTUAL AIR DENSITY
OUTPUT BTUs AT ALTITUDE OF 0.0 ft. = 224095
INPUT BTUs AT ALTITUDE OF 0.0 ft. = 243582
OUTPUT BTUs AT ALTITUDE OF 522 ft. = 219800
INPUT BTUs AT ALTITUDE OF 522 ft. = 238022

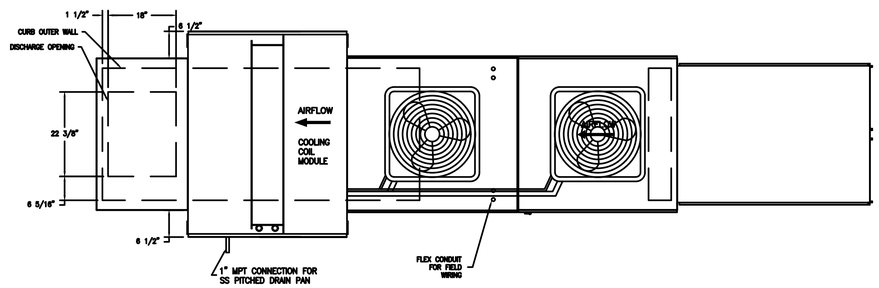

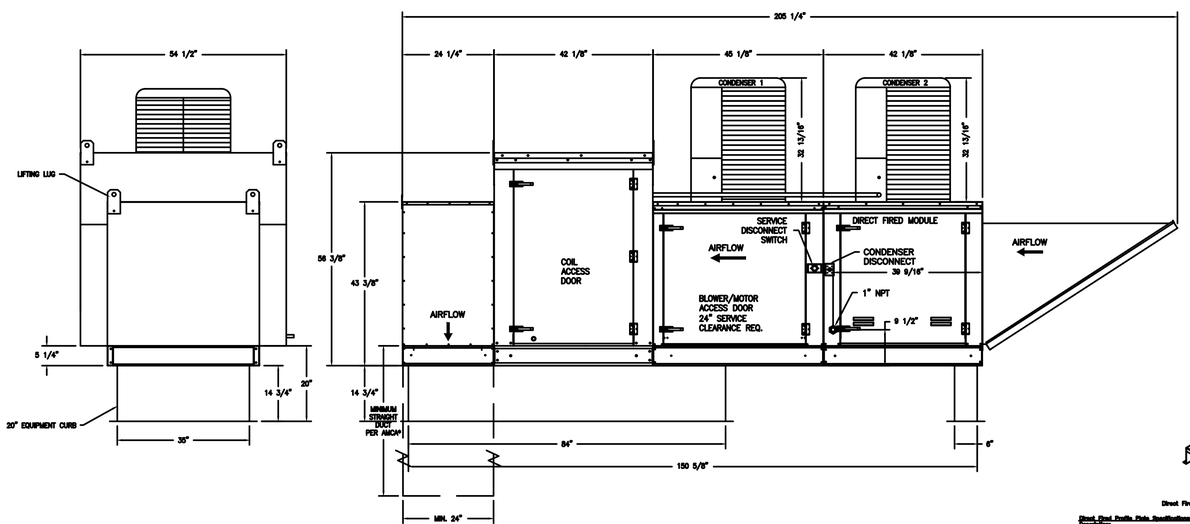

NOTE: UNLESS OTHERWISE STATED, PANDA RESTAURANT GROUP SHALL PROVIDE ALL EQUIPMENT ON THE FOLLOWING CAPTIVEAIRE SHEETS, INCLUDING: HOODS, FIRE SYTEM, EXHAUST FANS, SUPPLY FAN, BATHROOM FAN AND ELECTRICAL INTERLOCK PACKAGE

ANSUL GAS VALVE:

THE ANSUL GAS VALVE IS PROVIDED BY CAPTIVEAIRE SYSTEMS. CONTACT OUR OFFICE WITH THE VALVE SIZE 3 DAYS IN ADVANCE OF WHEN IT IS NEEDED ON SITE.

FOR QUESTIONS CALL THE
CAPTIVEAIRE
SOUTHERN CALIFORNIA OFFICE
STONE MILL DESIGN CENTER
2915 RED HILL AVE, SUITE C106
COSTA MESA, CA 92626
TEL: 800-967-7701 EMAIL: REG86@CAPTIVEAIRE.COM

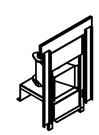

Direct Fired (DF) Profile Plate Assembly

Direct Fired Profile Plate Specifications:
Description:
Direct Fired burners shall have patented (US Patent No.: US8992302B2), self-adjusting profile plates designed to ensure proper air velocity and pressure drop across the burner. Profile plates shall allow burners to achieve stable combustion by forming fuel-rich pockets in a controlled manner to ignite at a wide range of gas flow rates (100% and turndown of 10 for climate DFU). Direct Fired burners to ignite at a wide range of gas flow rates (100% and turndown of 10 for climate DFU). Direct Fired self-adjusting profile plates shall ensure a consistent airflow, regardless of size or temperature.

Application:
Direct Fired burner profile plates are engineered to automatically react to the incursion of a cold air stream, without the need for dry contacts or actuators to mechanically adjust them. With this feature, all DF units are designed for demand control ventilation (DCV) requirements.

Certifications:
All Profile Plate assemblies shall be included in the DF unit's ETL listing and comply with combined safety standards ANSI Z83.4 and CSA 3.7 (non-recirculating DF heaters) and ANSI Z83.18 (recirculating DF heaters).

General Construction:
-Profile plates shall be formed from 22G galvanized steel.
-Profile plates shall vary in size per unit.
-Profile plates shall be mounted along the same plane as the discharge of the burner.
-Spring shall incorporate properly located permanently mounted spring hinges.
-Spring hinges shall be made from plated steel.

Typical Drain Trap Install

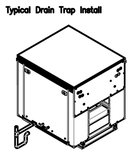

Recommended Cooling Coil Drain Trap Configuration

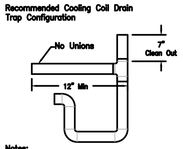

Notes:
1) 1" diameter PVC Pipe only
2) Use only low profile couplings
3) Add clean out as shown

HOOD DETAIL PLAN
FOR REFERENCE ONLY

REVISIONS

	DESCRIPTION	DATE
1		
2		
3		
4		

CAPTIVEAIRE
Southern California Office
3002 Dow Ave., Suite 410, Tustin, CA, 92780 PHONE: (714) 957-1500 FAX: (919) 227-5975 EMAIL: reg86@captiveaire.com
www.captiveairs.com

Panda Express - Fort Benning GA (D7432)
Ingersoll Street, Mini-Mall - Space 115
FORT BENNING, GA, 31905

DATE: 4/23/2020
DWG.#: 4333908
DRAWN BY: AH-86
SCALE: 3/4" = 1'-0"
MASTER DRAWING
SHEET NO. 4

PANDA EXPRESS
CHINESE KITCHEN

PANDA RESTAURANT GROUP INC.
1683 Walnut Grove Ave.
Rosemead, California
91770
Telephone: 626.799.9898
Facsimile: 626.372.8288

All ideas, designs, arrangement and plans indicated or represented by this drawing are the property of Panda Express Inc. and were created for use on this specific project. None of these ideas, designs, arrangements or plans may be used by or disclosed to any person, firm, or corporation without the written permission of Panda Express Inc.

REVISIONS:

ISSUE DATE:

1	95% SUBMITTAL	05/15/2020

DRAWN BY: MRM

PANDA PROJECT #: D7432
ARCH PROJECT #:

MARSHALL & BOLLWERK ENGINEERING, INC.
8681 Highway 92, Suite 400
Woodstock, Ga. 30189
p: (678) 795-0333, f: (678) 325-4559
e: mbe@mbeinc.net

BID SET (2020/05/28) NOT FOR CONSTRUCTION

PANDA EXPRESS
MINI-MALL - SPACE 115
INGERSOLL STREET
FT BENNING, GA

H-003

ELECTRICAL PACKAGE – Job#4333908

NO.	TAG	PACKAGE #	LOCATION	SWITCHES LOCATION	SWITCHES QUANTITY	OPTION	FANS CONTROLLED TYPE	Φ	H.P.	VOLT	FLA
1		SC-321110MA-SEP	Wall Utility Cabinet Left	OB – Ship Loose w/ Prestre	1 Light 1 Fan	Smart Controls Thermostatic Control w/ Relay On/Off with Supply	Exhaust	3	2.000	208	5.9
							Exhaust	3	2.000	208	5.9
							Supply	3	5.000	208	15.0

JOB NO	MODEL NUMBER	DRAWN BY	SCHEMATIC TYPE
4333908	SC–321110MA–SEP		INSTALL
	JOB NAME: Panda Express – Fort Benning ...	DATE: 4/23/2020	DWG NO: ECP #1–1

DESCRIPTION OF OPERATION:
3 Phase w/ control for 2 Exhaust Fans, 1 Supply Fan, Exhaust on in Fire, Lights out in Fire, Fan(s) On/Off Thermostatically Controlled. Separate Breaker input for each Fan. Room temperature sensor shipped loose for field installation. INVERTER DUTY 3 PHASE MOTOR REQUIRED FOR USE WITH VFD.

BREAKER PANEL TO PRIMARY CONTROL PANEL
Responsibility: Electrician
BREAKER SIZE SHOWN IS THE MAXIMUM ALLOWED

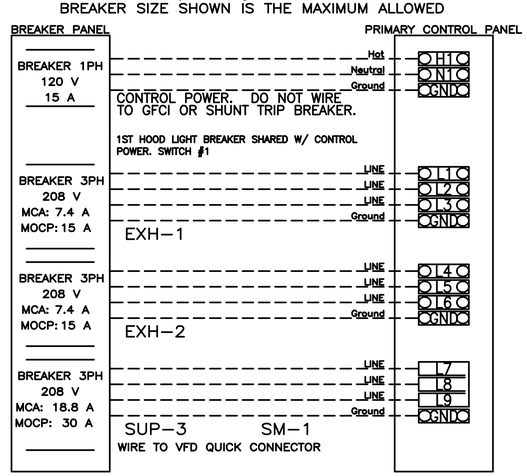

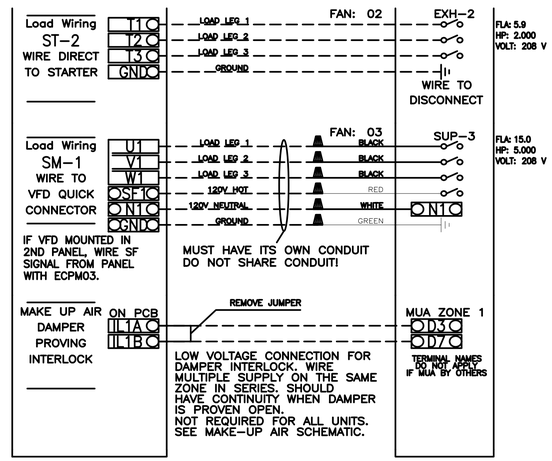

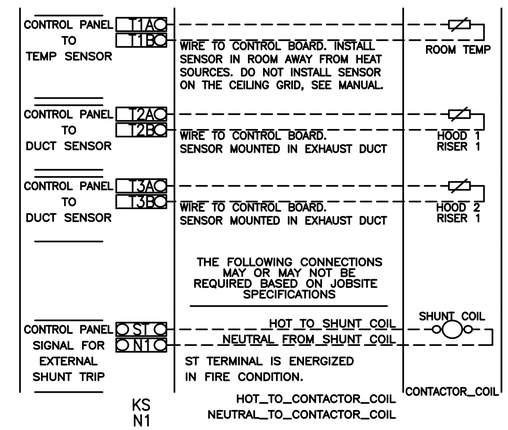

BREAKER PANEL TO FANS
Responsibility: Electrician

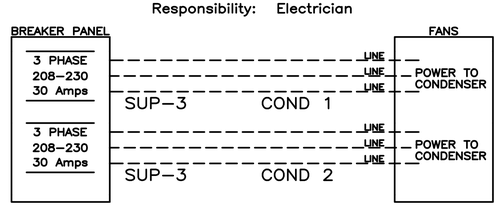

CONTROL PANEL TO FANS
Responsibility: Electrician

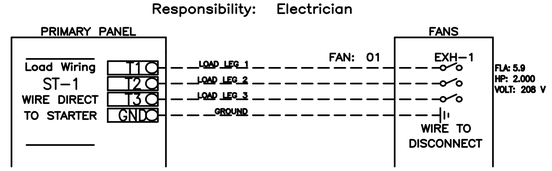

CONTROL PANEL TO ACCESSORY ITEMS
Responsibility: Electrician

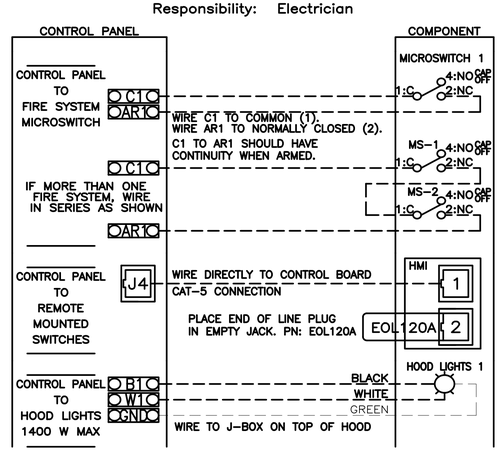

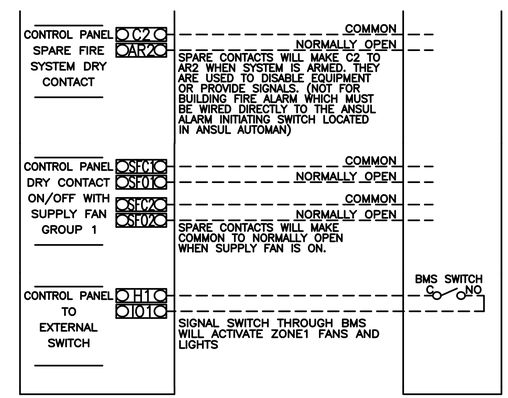

HOOD DETAIL PLAN
FOR REFERENCE ONLY

REVISIONS
DESCRIPTION	DATE

CAPTIVEAIRE
www.captiveaire.com
Southern California Office
3002 Dow Ave., Suite 410, Tustin, CA 92780 PHONE: (714) 957-1500 FAX: (919) 227-5975 EMAIL: reg86@captiveaire.com

Panda Express – Fort Benning GA (D7432)
Ingersoll Street,Mini–Mall – Space 115
FORT BENNING, GA, 31905

DATE: 4/23/2020
DWG.#: 4333908
DRAWN BY: AH–86
SCALE: 3/4" = 1'–0"
MASTER DRAWING
SHEET NO. 5

PANDA EXPRESS CHINESE KITCHEN

PANDA RESTAURANT GROUP INC.
1683 Walnut Grove Ave.
Rosemead, California
91770
Telephone: 626.799.9898
Facsimile: 626.372.8288

All ideas, designs, arrangement and plans indicated or represented by this drawing are the property of Panda Express Inc. and were created for use on this specific project. None of these ideas, designs, arrangements or plans may be used by or disclosed to any person, firm, or corporation without the written permission of Panda Express Inc.

REVISIONS:

ISSUE DATE:

1	95% SUBMITTAL	05/15/2020

DRAWN BY: MRM

PANDA PROJECT #: D7432
ARCH PROJECT #:

MARSHALL & BOLLWERK ENGINEERING, INC.
8681 Highway 92, Suite 400
Woodstock, Ga. 30189
p: (678) 795-0333, f: (678) 325-4559
e: mbe@mbeinc.net

BID SET (2020/05/28) NOT FOR CONSTRUCTION

PANDA EXPRESS
MINI-MALL - SPACE 115
INGERSOLL STREET
FT BENNING, GA

H-004

GENERAL PLUMBING NOTES

A. FOOD SERVICE EQUIPMENT: REFER TO OTHER PORTIONS OF PLANS AND SPECIFICATIONS FOR FURTHER INFORMATION ABOUT FOOD SERVICE ITEMS FURNISHED AND WORK PERFORMED BY OTHERS. VERIFY ROUGH-IN REQUIREMENTS WITH EQUIPMENT FURNISHED.
B. HEALTH DEPARTMENT: COMPLY WITH LOCAL HEALTH DEPARTMENT (HD) REGULATIONS.WHEREVER POSSIBLE, INSTALL ALL PIPING CONCEALED. CONFORM TO HD REQUIREMENTS FOR LOCATIONS OF FLOOR SINKS.
C. WORKMANSHIP SHALL BE FIRST CLASS, ACCEPTABLE TO OWNER.
D. MAKE COMPLETE: PROVIDE ITEMS AND WORK AS REQUIRED TO COMPLETE THE INSTALLATION OF PLUMBING SYSTEMS TO FIXTURES AND EQUIPMENT: TRAPS, STRAINERS, GAUGES, GAS AND WATER PRESSURE REGULATORS, FLEXIBLE CONNECTIONS, STOP VALVES, UNIONS, ETC. PROVIDE AND CONNECT PLUMBING PIPE FROM ROUGH-INS TO ITEMS AS SHOWN, SPECIFIED AND REQUIRED.
E. VERIFY LOCATIONS: EXISTING PIPING, POC SHOWN ON DRAWINGS HAS BEEN LOCATED FROM INFORMATION PROVIDED BY OTHERS. VERIFY EXACT LOCATION ON JOB SITE BEFORE START WORKING.
F. BACKFLOW PREVENTION: PROVIDE BACKFLOW PREVENTERS (BFP) IN WATER LINES ONLY IF REQUIRED BY LOCAL AUTHORITIES. USE DEVICES OF TYPE (VACUUM BREAKER, DOUBLE CHECK, REDUCED PRESSURE) AND MANUFACTURER APPROVED BY LOCAL AUTHORITIES, ONLY IN LOCATIONS REQUIRED.
G. WATER CONSERVATION: CONTRACTOR SHALL PROVIDE WATER FLOW LIMITING FEATURES ON FIXTURES IF/AS REQUIRED BY LOCAL AUTHORITIES.
H. COLD WATER: CONNECT TO DOMESTIC COLD WATER VALVED STUB. EXTEND COLD WATER PIPE, SUSPENDED FROM STRUCTURE ABOVE CEILING AND DOWN IN PARTITIONS, TO SERVE FIXTURES AND EQUIPMENT.
I. HOT WATER: PROVIDE COMMERCIAL TYPE WATER HEATER, DESIGN PER PLAN. RUN HOT WATER PIPE, SUSPENDED FROM STRUCTURE ABOVE CEILING AND DOWN IN PARTITIONS TO SERVE FIXTURE AND EQUIPMENT.
J. SANITARY: CONNECT TO SANITARY WASTE LINE.
K. BRANCHES: PROVIDE HOT AND/OR COLD WATER PIPES DOWN IN PARTITION TO SERVE VARIOUS EQUIPMENT PER "KITCHEN EQUIPMENT SCHEDULE".
L. SODA CONDUIT: PROVIDE 4" CONDUIT BELOW FLOOR FROM SODA STORAGE TO SODA DISPENSER.
M. CONDENSATE: PROVIDE 1" INSULATED PRIMARY AND SECONDARY CONDENSATE DRAIN PIPES FROM FAN-COIL UNIT ABOVE CEILING TO NEAREST FLOOR SINK.
N. GAS SERVICE: PROVIDE ALL PIPES, VALVES AND CONNECTION TO GAS METER. FOR NATURAL GAS SERVICE, COORDINATE WITH GAS UTILITY COMPANY FOR METER REQUIREMENTS, PERMITS AND FEES. ROUTE PIPE AS REQUIRED, SUSPENDED FROM STRUCTURE ABOVE. USE ALL WELDED PIPE, FITTINGS, AND JOINTS IN CEILING SPACE AND IN WALL AS PER LOCAL CODE.
O. INDIRECT DRAIN: AN AIR GAP TWICE THE SIZE OF THE DRAIN LINE MUST BE PROVIDED BETWEEN THE DRAIN LINE AND THE SANITARY SEWER.
P. LIQUID WASTE FROM ALL EQUIPMENT MUST BE DISCHARGED TO THE SANITARY SEWER.
Q. FLOOR DRAIN MUST BE PLACED ADJACENT TO EQUIPMENT WHICH DISCHARGES WASTE. FLOOR DRAIN INSTALLATION MUST NOT INTERFERE WITH PROPER FLOOR MAINTENANCE.
R. EXPOSED UTILITY LINES ON FLOORS ARE PROHIBITED. UTILITY LINES MUST NOT BE UNNECESSARILY EXPOSED ON WALLS.
S. ALL WATER AND GAS CONNECTIONS TO ALL PLUMBING FIXTURES TO BE HARD PIPED. NO FLEX PIPE.
T. ALL PIPES 6" A.F.F. NO FLOOR SUPPORTS ALLOWED.
U. ALL WATER PIPES IN EXPOSED AREAS OUTSIDE WALLS AND BELOW CEILING MUST BE COPPER UNLESS NOTED OTHERWISE.

PLUMBING SPECIFICATIONS

1. WORK INCLUDES CONNECTION OF PLUMBING UTILITIES TO DEVELOPER OR LANDLORD'S UTILITIES AND INSTALLATION OF A COMPLETE PLUMBING SYSTEM WITHIN SPACE. PROVIDE NEW MATERIALS, FITTINGS, ACCESSORIES, FIXTURES AND EQUIPMENT NECESSARY FOR A COMPLETE AND PROPERLY FUNCTIONING SYSTEM AS SHOWN ON PLANS AND AS REQUIRED. WORK INCLUDES FINAL CONNECTIONS TO EQUIPMENT AND FIXTURES PROVIDED BY OTHERS. FURNISH ALL NEW MATERIALS. WORK SHALL BE PERFORMED BY EXPERIENCED TRADESMEN, AND THEIR WORKMANSHIP SHALL BE HIGH STANDARD, ACCEPTABLE TO OWNER.
2. CODES: ALL WORK SHALL BE IN ACCORDANCE WITH LOCAL CODES, SAFETY REGULATIONS, OR ORDINANCES. PAY FOR ANY PERMITS REQUIRED, AND CALL FOR ANY REQUIRED INSPECTIONS TO BE MADE BY LOCAL AUTHORITIES.
3. INTENT OF DRAWINGS IS TO INDICATE GENERAL EXTENT OF WORK REQUIRED FOR PROJECT. DRAWINGS FOR PLUMBING WORK ARE DIAGRAMMATIC, SHOWING GENERAL LOCATION, TYPE, PIPING, FIXTURES AND EQUIPMENT REQUIRED. PROVIDE ALL FITTINGS, ACCESSORIES, OFFSETS, AND MATERIALS NECESSARY TO FULFILL INTENT OF PLANS. DRAWINGS SHALL NOT BE SCALED FOR EXACT MEASUREMENTS. USE DIMENSIONED ARCHITECTURAL DRAWINGS. REFER TO MANUFACTURER'S STANDARD ROUGH-IN DRAWINGS FOR PLUMBING FIXTURES, AND TO ARCHITECTURAL DRAWINGS FOR EXACT LOCATIONS.
4. FSE ROUGH-IN DRAWINGS: REFER TO ROUGH-IN DRAWINGS FURNISHED BY THE FOOD SERVICE EQUIPMENT SUPPLIER, FOR EXACT LOCATION OF WATER PIPING SUPPLIES AND DRAIN LOCATIONS TO SERVE FOOD SERVICE EQUIPMENT. DO NOT LAYOUT WORK OF THIS SECTION WITHOUT SUCH DRAWINGS.
5. COORDINATE WITH WORK OF OTHER SECTIONS AND TRADES, WITH EQUIPMENT FURNISHED BY OTHERS, AND WITH CONSTRAINTS OF EXISTING CONDITIONS OF PROJECT SITE.
6. MISCELLANEOUS EXPENSES SUCH AS HOOK-UP CHARGES, PERMITS, INSPECTIONS, AND OTHER EXPENSES RELATED TO A COMPLETE AND FUNCTIONING SYSTEM ARE INCLUDED AS PART OF THIS SECTION.
7. PIPING SYSTEMS, GENERAL: ALL PIPING SHALL BE RUN PARALLEL TO BUILDING LINES AND SUPPORTED AND ANCHORED AS REQUIRED TO FACILITATE EXPANSION AND CONTRACTION. ALL PIPING SHALL BE CONCEALED EXCEPT IN UNFINISHED SPACES. INSTALL AS REQUIRED TO MEET ALL CONSTRUCTION CONDITIONS AND TO ALLOW FOR INSTALLATION OF OTHER WORK INCLUDING DUCTS AND ELECTRICAL CONDUIT. AT ALL CONNECTIONS BETWEEN FERROUS PIPING AND NONFERROUS PIPING, PROVIDE AN ISOLATING DIELECTRIC UNION. SEAL PIPE PENETRATIONS OF FIRE FLOORS AND FIREWALLS WITH FIREPROOF PUTTY OR GROUT. PROVIDE SUMMER OR EQUIVALENT PIPE HANGING SYSTEM IN CHASES. PROVIDE HANGERS AS RECOMMENDED BY HANGER MANUFACTURER AND MSS-SP-58, 69 AND 89.
8. WASTE PIPING: PROVIDE ALL DRAIN, WASTE AND SEWER PIPING WITHIN PROJECT SPACE WITH CONNECTION TO SANITARY WASTE SYSTEM ON SITE. PROVIDE A COMPLETE SYSTEM OF WASTE PIPING, CONSISTING OF SCH 40 PVC PIPE, CONNECTORS AND FITTINGS ALL PIPING SHALL BE SLOPED UNIFORMLY AT 2% UNLESS OTHERWISE REQUIRED BY EXISTING CONDITIONS.
   8.1. CLEANOUTS SHALL BE INSTALLED IN ALL HORIZONTAL DRAINAGE PIPE AND SHALL BE LOCATED NOT MORE THAN 100 FT APART.
   8.2. CLEANOUTS SHALL BE INSTALLED AT ALL CHANGES OF DIRECTION GREATER THAN 45 DEGREES. WHERE MORE THAN ONE CHANGE OF DIRECTION OCCURS IN A SINGLE PIPE RUN, ONLY ONE (1) CLEANOUT SHALL BE REQUIRED FOR EVERY 40 FEET OF DEVELOPED LENGTH
9. VENTS: PROVIDE A COMPLETE SYSTEM OF VENT PIPING, CONSISTING OF SCH 40 PVC PIPE, CONNECTORS AND FITTINGS. COMBINE THE VENT RISERS IN THE CEILING SPACE. CONNECT TO EXISTING VENT MAIN.
10. WATER PIPING: CONNECT TO EXISTING WATER PIPING AND PROVIDE A NEW DOMESTIC HOT AND COLD WATER PIPING SYSTEM INSIDE THE BUILDING AS SHOWN ON DRAWINGS. LAY OUT WATER PIPING SO THAT ENTIRE SYSTEM CAN BE DRAINED. DOMESTIC (HOT & COLD) WATER PIPING ABOVE GRADE SHALL BE TYPE "L" COPPER TUBING. FITTINGS SHALL BE WROUGHT COPPER WITH LEAD FREE SOLDER. PIPING SHALL NOT TOUCH FERROUS MATERIALS. FIRMLY SUPPORT PIPING USING NON FERROUS PIPE SUPPORTS. PROVIDE WATER HAMMER ARRESTERS AT RESTROOM AREA & CHINESE WOK AREA PER DRAWING SHOWN. FLUSH WATER PIPING CLEAR OF DEBRIS AND CLEAN AERATORS AND STRAINERS AT TERMINATION OF INSTALLATION.
11. NATURAL GAS PIPING: INSIDE AND OUTSIDE THE BUILDING ABOVE GRADE SHALL BE SCHEDULE 40 BLACK STEEL ASTM A-33 PIPE WITH 125 LB MALLEABLE IRON SCREWED FITTINGS WHERE EXPOSED. PRIMER AND PAINT EXTERIOR GAS PIPING TO PREVENT RUST. PROVIDE ALL UNIONS, SHUT OFF VALVES AND DRIP LEGS REQUIRED BY NFPA-54 AND GOVERNING CODES. PROVIDE ALL TESTS, INSPECTIONS, HANGERS AND APPURTENANCES REQUIRED FOR A COMPLETE OPERATING SYSTEM. TAP ON UTILITY GAS MAIN AND GAS METER SHALL BE BY GAS COMPANY. EXTEND PIPING FROM METER TO EQUIPMENT AS DETAILED ON DRAWINGS. PROVIDE ROUTING, HANGING, AND PENETRATIONS PER OWNER'S REQUIREMENTS.
12. PIPE INSULATION: INSULATE ALL COLD WATER WITH ½", AND HOT WATER & CONDENSATE PIPING WITH 1", PLENUM-RATED ELASTOMERIC INSULATION (BY ARMSTRONG, RUBATEX OR EQUAL) MAY BE USED.
13. PIPE MARKING:
   13.1. IDENTIFY ALL PIPING WITH ANSI/ASME A13.1 2007 APPROVED PIPE MARKER SYSTEM USING EZ ARROWS AND ARROW BANDING TAPE IN CONJUNCTION WITH EZ PIPE MARKERS. PRODUCTS AVAILABLE AT PIPEMARKER.COM. 822-274-6271. INSTALL PER MANUFACTURERS INSTRUCTIONS.
   13.2. IDENTIFY ALL MANIFOLDS AND ALL VALVES ON THE MANIFOLDS FOR CORRESPONDING FIXTURES.
14. SHUT-OFF VALVES WITH UNIONS SHALL BE PROVIDED AT BRANCHES TO GROUPS OF MORE THAN TWO FIXTURES, AND AT THE WATER HEATER, TO FACILITATE ISOLATION FOR REPAIR OR REPLACEMENT. USE CHROME-FINISHED FORGED BRONZE BODY BALL VALVE, WITH TEFLON SEATS AND PACKING, 400 LB WOG, WITH SOLDER ENDS, EQUAL TO JENKINS J9002-T. GAS VALVES SHALL BE ALL BRONZE LUBRICATED PLUG COCKS FOR SCREWED PIPE, BY WALWORTH, ROCKWELL, NORDSTROM OR APPROVED EQUIVALENT.
15. ACCESS PANELS SHALL BE PROVIDED IN CEILINGS OR WALLS WHERE CONCEALED CONTROL DEVICES ARE LOCATED, EXCEPT WHERE ACCESS FOR ADJUSTMENT AND MAINTENANCE IS POSSIBLE THROUGH LAY-IN CEILINGS.
16. SUPPLIES AND TRAPS: PROVIDE WATER SEALED TRAPS AND SUPPLIES INSTALLED AS CLOSE AS POSSIBLE TO ALL PLUMBING FIXTURES, DRAINS, AND FOOD SERVICE EQUIPMENT OR BEVERAGE DISPENSING EQUIPMENT ITEMS FURNISHED BY OTHERS, HAVING A WASTE CONNECTION, OR REQUIRING WATER SERVICE. EXPOSED TRAPS AND SUPPLIES IN EXPOSED AREAS (INCLUDING CABINET INTERIORS) SHALL BE CHROME PLATED BRASS.
17. INSTALLATION: THOROUGHLY CLEAN ITEMS BEFORE INSTALLATION. CAP PIPE OPENINGS TO EXCLUDE DIRT UNTIL FIXTURES ARE INSTALLED AND FINAL CONNECTIONS HAVE BEEN MADE. PROCEED AS RAPIDLY AS CONSTRUCTION WILL PERMIT. SET FIXTURES LEVEL AND IN PROPER ALIGNMENT. INSTALL SUPPLIES IN PROPER ALIGNMENT WITH FIXTURES, PER MANUFACTURER'S ROUGH-IN DIMENSIONS. INSTALL SILICONE SEALANT BETWEEN FIXTURES AND ADJACENT MATERIAL, FOR SANITARY JOINT. REPAIR ANY DAMAGE DONE TO EXISTING FEATURES AND RESTORE TO ORIGINAL CONDITIONS. PROVIDE CLEAN CONDITIONS AT TERMINATION OF WORK.
18. TEST WATER, GAS, VENT, AND WASTE SYSTEMS PER LOCAL CODE REQUIREMENTS. WHEN TESTING INDICATES MATERALS OR WORKMANSHIP ARE DEFICIENT, REPLACE OR REPAIR AS REQUIRED, AND REPEAT TEST TILL STANDARDS ARE ACHIEVED.
19. GUARANTEE THE WORK AND THE INSTALLATION FOR ONE YEAR AFTER FORMAL ACCEPTANCE BY THE OWNER.
20. ALL SAW CUT AND PATCH BACK OF FLOOR TO MATCH EXISTING FINISHES. BACKFILL PER DEVELOPER OR OWNER' SOILS ENGINEER'S RECOMMENDATIONS

PLUMBING KEY NOTES

1. NOT USED
2. ¾" G DOWN TO RICE COOKER W/ SOV. PROVIDE 6" LENGTH OF RIGID PIPE BETWEEN RICE COOKER AND FLEXIBLE GAS LINE.
3. CONNECT NEW 2" 5 PSI GAS LINE TO NEAREST MIN. 1½" 5 PSI GAS MAIN ON SITE. VERIFY SIZE AND LOCATION ON SITE.
4. 1½" G DOWN TO DEEP FRYER W/ SOV.
5. 1½" G DOWN TO CHINESE RANGE "20A OR 20B" W/ SOV. LOCATE STUB OUT BEHIND THE END OF RANGE FOR EASY ACCESS.
6. NOT USED.
7. NOT USED.
8. ROUTE NEW PIPING IN WALL.
9. 2" GAS ANSUL VALVE PROVIDED BY OWNER (G.C. CALL CAPITMEARE FOR DELIVERY). INSTALL GAS ANSUL VALVE AS CLOSE TO EXTERIOR WALL AS ALLOWED PER LOCAL CODE.
10. NOT USED.
11. CONNECT NEW ¾" FW LINE TO EXISTING MIN. ¾" FW LINE. VERIFY LOCATION ON EXISTING MIN. ¾" FW LINE ON SITE.
12. ½" CW TO TRAP PRIMER. PROVIDE WALL ACCESS PANEL. RUN ½" CW BELOW FLOOR TO FLOOR DRAIN, SEE DETAIL #17 ON PLAN P-500.
13. NEW MIN. 1-1/4" CW/HW LINES TO CONNECT TO MIN. 1-1/4" CW/HW LINES. VERIFY POINT OF CONNECTION ON SITE.
14. NOT USED.
15. SHUT OFF VALVE W/ HANDLE AT 11'-0" ABOVE FINISH FLOOR, EASILY ACCESSIBLE. G.C. TO INSTALL LOCATION INDICATOR STICKER PROVIDED BY PANDA EXPRESS
16. 1" G DOWN TO CHINESE RANGE "20Q" W/ SOV. LOCATE STUB OUT BEHIND THE END OF RANGE FOR EASY ACCESS.
17. ½" HW & CW TO FAUCET (40B) FOR CHEMICAL FEED SYSTEM.
18. GAS HEADER - INSTALL TIGHT TO WALL AND TIGHT TO BOTTOM OF TRUSSES.

PLUMBING SYMBOLS

	NEW COLD WATER PIPING
	EXISTING COLD WATER PIPING
F	NEW COLD FILTERED WATER PIPING
	EXISTING HOT WATER PIPING
	NEW HOT WATER PIPING
	HOT WATER CIRCULATION PIPING
G	NEW GAS LINE
	PLUMBING VENT (V)
4"GS	NEW GREASE WASTE WASTE (GS) BELOW SLAB/GRADE
4"GS	EXISTING GREASE WASTE WASTE (GS) BELOW SLAB/GRADE
	PIPE TURNING UP/DOWN
	GAS COCK
	F.S. WITH HALF GRATE
FD	FLOOR DRAIN
A	FIXTURE IDENTIFICATION
1	PLAN NOTE
1	KITCHEN EQUIPMENT IDENTIFICATION
VTR	VENT THRU ROOF
AFF/AFG	ABOVE FINISHED FLOOR/GRADE
CO	CLEANOUT
WCO	WALL CLEANOUT
FCO FGCO	FLUSH FLOOR/GRADE CLEANOUT
FPC	FIRE PROTECTION CONTRACTOR
DNR	DEPARTMENT OF NATURAL RESOURCES
TYP	TYPICAL
(E)	EXISTING
	POINT OF CONNECTION
BV	BALL VALVE
CV	CHECK VALVE
GS	GREASE WASTE

NOTES:

1. ALL WATER LINES SERVING WATER HEATERS SHALL RUN DOWN FROM CEILING SPACE IN WALL, OFFSET OVER THROUGH WALL 6" BELOW CEILING, ABOVE WATER HEATER, THEN DROP DOWN TO HEATER.
2. AVOID RUNNING WATER VALVES DIRECTLY ABOVE WATER HEATER, TO AVOID DAMAGE TO WATER HEATER CAUSED BY POSSIBLE LEAKS.
3. REFER TO PIPING RISER DIAGRAMS, SHEET P-400 FOR ALL PIPE SIZING NOT SHOWN ON FLOOR PLAN.
4. DO NOT RUN ANY PIPING HORIZONTAL IN WALL SPACE, U.N.O.
5. REFER TO RISER DIAGRAMS, SHEET P-400

PIPING NOTE:

GC TO RUN NEW 2" GAS LINE TO SPACE FROM NEAREST POINT OF CONNECTION.

GC TO VIELD VERIFY ALL GAS, HW, CW POINTS OF CONNECTION.

GC TO INCLUDE ON THE CONSTRUCTION BID THE COST TO BRING A NEW GAS LINE TO THE PANDA EXPRESS LOCATION FORM THE NEAREST POINT OF CONNECTION.

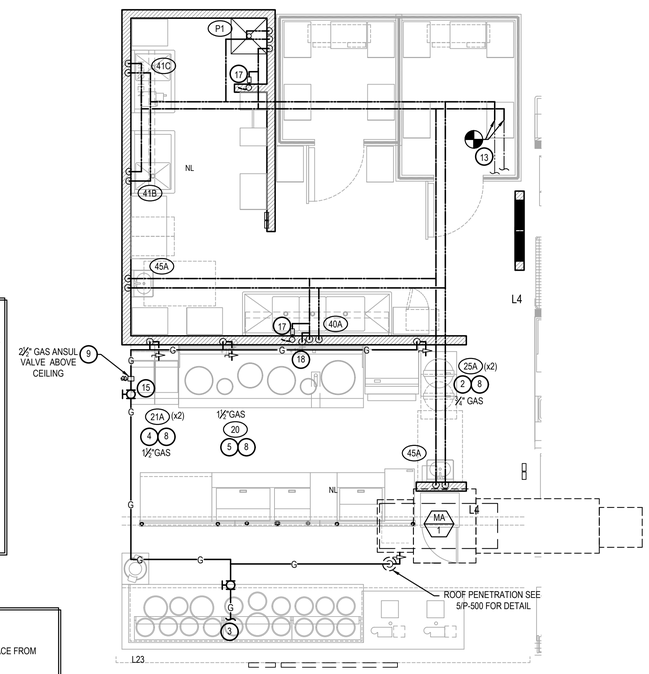

WATER & GAS PLAN | 1

Scale:1/4"=1'-0" | P-100

BID SET (2020/05/28) NOT FOR CONSTRUCTION

PANDA RESTAURANT GROUP INC.
1683 Walnut Grove Ave.
Rosemead, California
91770
Telephone: 626.799.9898
Facsimile: 626.372.8288

All ideas, designs, arrangement and plans indicated or represented by this drawing are the property of Panda Express Inc. and were created for use on this specific project. None of these ideas, designs, arrangements or plans may be used by or disclosed to any person, firm, or corporation without the written permission of Panda Express Inc.

REVISIONS:

ISSUE DATE:

1	95% SUBMITTAL	05/15/2020

DRAWN BY: MRM

PANDA PROJECT #: D7432

ARCH PROJECT #:

MARSHALL & BOLLWERK ENGINEERING, INC.
8881 Highway 92, Suite 400
Woodstock, Ga. 30189
p: (678) 795-0333, f: (678) 325-4559
e: mbe@mbeinc.net

GEORGIA No.PE038052 PROFESSIONAL ENGINEER MATTHEW R. MERCER
5/15/2020

PANDA EXPRESS

MINI-MALL - SPACE 115
INGERSOLL STREET
FT BENNING, GA

P-100

WATER & GAS PLAN

PLUMBING FIXTURE SCHEDULE

D	FLOOR DRAIN: ZURN # ZB415-B5 CAST IRON DRAIN WITH 5" ROUND POLISHED BRONZE TOP, MEMBRANE FLASHING CLAMP. PROVIDE 3" OUTLET WITH P-TRAP. CLEAN AND POLISH AFTER INSTALLATION. REFER TO DETAIL 9/P-500 & 17/P-500. PROVIDE TRAP PRIMER
E	FLOOR SINK: ZURN # Z1901-32, RECEPTOR WITH 12" SQUARE TOP x 8" DEEP CAST IRON BODY WITH ACID-RESISTING ENAMEL INTERIOR. RECEPTOR PROVIDED WITH ALUMINUM DOME STRAINER WITHOUT GRATE.
G	FLOOR DRAIN WITH FUNNEL: ZURN # ZB415-AR-4 ACID RESISTING EPOXY COATED CAST IRON DRAIN WITH 5" ROUND POLISHED BRONZE TOP, 4" FUNNEL. PROVIDE 3" OUTLET WITH P-TRAP. CLEAN AND POLISH AFTER INSTALLATION. REFER TO DETAIL. PROVIDE TRAP PRIMER
M	TRENCH DRAIN: ZURN #Z-886-RFS, 6" WIDE x 80" LONG, TRENCH DRAIN SYSTEM. MODULAR CHANNEL SECTIONS SHALL BE MADE OF HIGH DENSITY POLYETHYLENE WITH INTERLOCK ENDS, A RADIUS BOTTOM AND REINFORCED STAINLESS STEEL SLOTTED GRATE.
P1	MOP SINK: GSW # SE2424FM 24"x24" STAINLESS STEEL UNIT WITH 13" HIGH SIDES, 18 GA. STAINLESS STEEL.CHICAGO FAUCET #897 WITH INTEGRAL STOPS IN SHANKS, WALL BRACE, HOSE THREADS, PAIL HOOK, VACUUM BREAKER; ROUGH BRASS FINISH; THREE FOOT RUBBER HOSE; 3" TRAPPED AND VENTED WASTE CONNECTION. PROVIDE 3/4" HW & CW RI 8" OC, 36" A.F.F. PROVIDE ¼" CW HOSE BIBB, ACORN #8121 W/ VACUUM BREAKER, 48" A.F.F. FOR CHEMICAL CONNECTION.

FIXTURE BRANCH SCHEDULE

FIXTURE	COLD WATER	HOT WATER	WASTE	VENT
2 AND 3 - COMP SINK	1/2"	1/2"	3"	2"
HAND SINK	1/2"	1/2"	2"	1 1/2"
MOP SINK (J.S.)	1/2"	1/2"	3"	2"
EQUIPMENT	1/2"	--	--	--
FLOOR DRAIN/SINK	--	--	2" OR 3"	2"

PIPE MATERIAL SCHEDULE

SERVICE	UNDERGROUND	ABOVE GROUND
COLD & HOT WATER	TYPE "K" OR "L" HARD DRAWN COPPER TUBE	TYPE "K" OR "L" HARD DRAWN COPPER TUBE
SANITARY WASTE	*SCH. 40 PVC	SCH. 40 CAST IRON
SANITARY VENT	*SCH. 40 PVC	SCH. 40 CAST IRON
GAS	____	BLACK STEEL, SCHEDULE 40
INDIRECT DRAIN	____	HARD DRAWN COPPER TUBE TYPE "M"

*SCH. 40 PVC IS PREFERRED IF APPROVED BY AUTHORITY HAVING JURISDICTION.
PROVIDE SCHEDULE 40 PVC FOR ALL WASTE VENT PIPING & FITTINGS.

KITCHEN EQUIPMENT SCHEDULE

ITEMS IN THIS SCHEDULE ARE FURNISHED BY THE OWNER AND INSTALLED BY THE GENERAL CONTRACTOR AND CONNECTED TO THE PLUMBING UTILITIES BY THE PLUMBING CONTRACTOR, WHO SHALL INSTALL ALL PLUMBING DEVICES FURNISHED WITH EQUIPMENT.

WASTE, FS = FLOOR SINK, CFD = CONDENSATE FLOOR DRAIN, VB = VACUUM BREAKER. FLEX = A SIX FOOT COILED LENGTH OF FOOD QUALITY FLEXIBLE REINFORCED PLASTIC TUBING CONNECTED FROM THE ROUGH IN TO THE EQUIPMENT WITH ALL REQUIRED ADAPTERS AND HOSE CLAMPS.

ALL PIPES MUST MAINTAIN A MINIMUM CLEARANCE OF 6" AFF AND MUST BE WELL SUPPORTED. NO FLOOR SUPPORTS ALLOWED.

20 CHINESE RANGE: PROVIDE ½" CW AT 10" AFF WITH BV. PROVIDE PRESSURE TYPE VB OR OTHER BACKFLOW DEVICE AS REQUIRED BY LOCAL CODE, AND CONNECT TO OWNER SUPPLIED FAUCETS. PROVIDE 2" COPPER PIPE IW TO FS WITH 2" AIR GAP. PROVIDE 1½" GAS SUPPLY AT 9" AFF WITH EASILY ACCESSIBLE SHUT-OFF VALVE. INSTALL OWNER SUPPLIED GAS REGULATOR AND ADJUST GAS LEVEL TO BURNERS.

21A FRYER: PROVIDE 1½" GAS SUPPLY DOWN TO 14" AFF THEN TRANSITION TO 1" WITH 90° ANGLE AND SHUT OFF VALVE. PROVIDE ALL REQUIRED FITTINGS AND INSTALL OWNER SUPPLIED QUICK DISCONNECT FLEXIBLE PIPE AND CONNECT TO UNITS WITH 90° ANGLE. SEE DETAIL ON P-500

25A RICE COOKER: PROVIDE ½" GAS SUPPLY AT 30", AND ½" GAS SUPPLY AT 10" AFF WITH SHUT OFF VALVES, ONE FOR EACH UNIT. PROVIDE ALL REQUIRED FITTINGS AND INSTALL OWNER SUPPLIED QUICK DISCONNECT FLEXIBLE PIPE AND CONNECT TO UNITS.

31M WALK-IN COOLER: PROVIDE 1" COPPER PIPE IW FROM DRAIN PAN ON EACH UNIT TO FLOOR DRAIN WITH 'P' TRAP AND 1" AIR GAP. MOUNT ALL PIPES WITHIN WALK-IN BOX WITH 1" HOLD-OFF SUPPORTS.

32A WALK-IN FREEZER: PROVIDE 1" COPPER PIPE IW FROM DRAIN PAN ON EACH UNIT TO FLOOR DRAIN WITH 'P' TRAP AND 1" AIR GAP. MOUNT ALL PIPES WITHIN WALK-IN BOX WITH 1" HOLD-OFF SUPPORTS. PROVIDE HEAT TRACE REFER TO ELECTRICAL DRAWING.

40A POT SINK: PROVIDE ½" CW AND ½" HW AT 14" AFF AND 8" OC WITH BVS & CV. CONNECT TO OWNER SUPPLIED FAUCET WITH COPPER PIPING. PROVIDE 2" COPPER PIPE IW (MANIFOLD ALL COMPARTMENT DRAINS INTO ONE LINE) TO FS WITH 2" AIR GAP, OR, IF REQUIRED BY LOCAL CODE, INSTALL 2" COPPER PIPE DIRECTLY TO SEWER SYSTEM. INSTALL OWNER SUPPLIED LEVER DRAIN STOPS, SEE DETAIL ON SHEET P-500. FAUCET FOR CHEM: T&S BRASS MODEL #B-0669-POL

41B 41C SINGLE BOWL PREP SINK: PROVIDE ½" CW AND ½" HW AT 14" AFF AND 8" OC WITH BVS. TRANSITION TO ½" PRIOR TO CONNECTION. CONNECT TO OWNER SUPPLIED FAUCETS WITH COPPER PIPING. PROVIDE 2" COPPER PIPE IW TO FS WITH 2" AIR GAP, OR, IF REQUIRED BY LOCAL CODE, INSTALL 2" COPPER PIPE DIRECTLY TO SEWER SYSTEM. INSTALL OWNER SUPPLIED LEVER DRAIN STOPS.

45A HAND SINK, PROVIDE ½" CW AND ½" HW AT 24" AFF AND 8" OC WITH CHROME-PLATED, ¼ TURN BALL VALVES. CONNECT TO OWNER SUPPLIED FAUCETS WITH METAL FLEX PIPING. PROVIDE 2" DRAIN PIPE WITH 'P' TRAP AND WALL MOUNTED CLEAN-OUT. ALL EXPOSED DRAIN PIPES AND FITTINGS TO BE CHROME PLATED, NOT P.V.C.

FIXTURE UNIT SCHEDULE

ITEM	FIXTURE	QTY	WATER FU EACH	WATER FU TOTAL	SEWER FU EACH	SEWER FU TOTAL
D	FLOOR DRAIN 3" TRAP	2	___	___	5	10
E	FLOOR SINK 3" TRAP	4	___	___	5	20
P1	MOP SINK	1	3	3	3	3
G	FLOOR DRAIN W/ FUNNEL 2" TRAP	2	___	___	3	6
M	TRENCH DRAIN 3" TRAP	1	___	___	5	5
20	CHINESE RANGE	1	2	2	FS	___
40A	POT SINK (3.COMP.)	1	4	4	FS	___
41B 41C	PREP. SINK (2.COMP.)	2	4	4	FS	___
45A	HAND SINK (WALL MOUNT)	1	2	2	1	2
	TOTAL			15		36

FIXTURE UNIT SUMMARY

SERVICE	TOTAL F.U.
DOMESTIC WATER	15
SANITARY SEWER	36

SERVICE REQUIREMENTS

SERVICE	SIZE MAIN		CAPACITY	
DOMESTIC WATER	1-1/4	INCH	17.5	GPM
SANITARY SEWER	4	INCH	36	F.U.
FUEL GAS	2	INCH	1,004	CFH
FIRE PROTECTION		INCH		GPM

WATER PIPE SIZING CHART (COLD WATER)

PIPE SIZE	GPM	VELOCITY FT/SEC	FIXTURE UNITS F - TANK	F - VALVE
1/2"	2.5	3.5	2 F.U. @ psi	6.0 F.U. @ psi
3/4"	6.6	4.4	8 F.U. @ psi	F.U. @ psi
1"	13.4	5.2	19 F.U. @ psi	F.U. @ psi
1-1/4"	23.3	5.9	37 F.U. @ psi	6 F.U. @ psi
1-1/2"	36.7	6.6	74 F.U. @ psi	23 F.U. @ psi
2"	76.4	7.9	254 F.U. @ psi	132 F.U. @ psi

* DOMESTIC WATER BACKFLOW PREVENTER MODEL: "WILKINS"975XL SIZE 1-1/2"
** PRESSURE REGULATING VALVE MODEL: N/A SIZE N/A

WATER PIPE SIZING CHART (HOT WATER)

PIPE SIZE	GPM	VELOCITY FT/SEC	FIXTURE UNITS F - TANK	F - VALVE
1/2"	2.5	3.5	2 F.U. @ psi	F.U. @ psi
3/4"	6.6	4.4	8 F.U. @ psi	F.U. @ psi
1"	13.2	5.0	19 F.U. @ psi	F.U. @ psi
1-1/4"	19.0	5.0	37 F.U. @ psi	6 F.U. @ psi

GREASE INTERCEPTOR CALCULATION

FIXTURE	QTY.	FU	FU TOTAL
FLOOR DRAIN/FLOOR SINK 3" TRAP	6	5	30
TRENCH DRAIN 3" TRAP	1	5	5
MOP SINK	1	3	3
TOTAL			38 (19 GPM)
APPROX.FLOW RATE (2 DFU'S = 1 GPM) PER 2012 IPC 709.3			19 GPM

NOTES:
1. CALCULATIONS WERE PERFORMED PER 2015 INTERNATIONAL PLUMBING CODE.
2. CALCULATIONS FOR REFERENCE AND RECORDS ONLY.

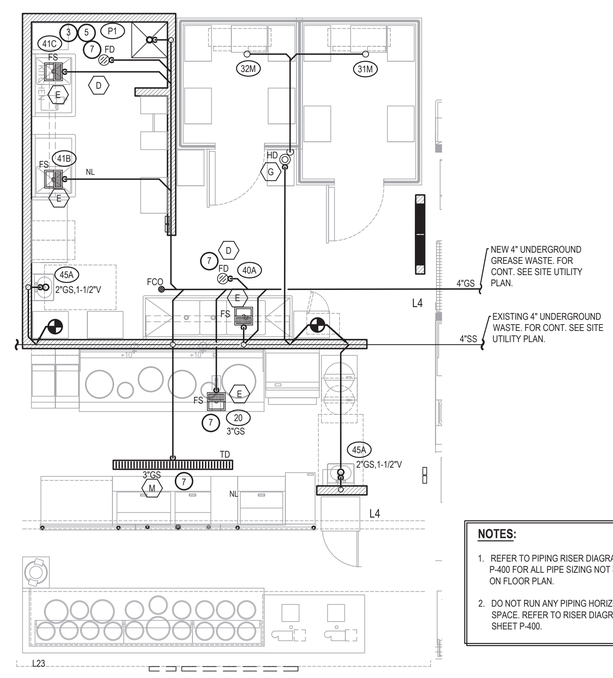

NOTES:
1. REFER TO PIPING RISER DIAGRAM, SHEET P-400 FOR ALL PIPE SIZING NOT SHOWN ON FLOOR PLAN.
2. DO NOT RUN ANY PIPING HORIZONTAL IN WALL SPACE. REFER TO RISER DIAGRAM, SHEET P-400.

PLUMBING KEY NOTES

1. NOT USED
2. CONDENSATE: ROUTE SHARED CONDENSATE LINE THROUGH WALK-IN COOLER. DO NOT RUN THROUGH WALK-IN FREEZER . PROVIDE 1" INSULATED CONDENSATE DRAIN PIPE FROM THE EVAPORATIVE COIL. DISCHARGE TO FLOOR SINK OR MOP SINK WITH AIR GAP OF TWICE PIPE DIAMETER. INSTALL AT MINIMUM 76" HEIGHT A.F.F. REFER TO DETAIL #2 ON SHEET P-500.
3. NOT USED .
4. PROVIDE TRAP PRIMER FOR FLOOR DRAIN. SEE DETAILS #9 & #17 ON DWG P-500.
5. RELIEF VALVE: PROVIDE 3/4" PIPE FULLY INSULATED. CONTINUE AND STOP AT 6" ABOVE GROUND AT MOP SINK.
6. CONNECT NEW GREASE WASTE (GS) PIPING TO EXISTING GREASE WASTE PIPING. VERIFY LOCATION OF EXISTING GREASE WASTE PIPING ON SITE.
7. COMBINATION WASTE/VENT

WASTE & VENT PLAN | 1
Scale:1/4"=1'-0" | P-101

BID SET (2020/05/28) NOT FOR CONSTRUCTION

PANDA RESTAURANT GROUP INC.
1683 Walnut Grove Ave.
Rosemead, California
91770
Telephone: 626.799.9898
Facsimile: 626.372.8288

All ideas, designs, arrangement and plans indicated or represented by this drawing are the property of Panda Express Inc. and were created for use on this specific project. None of these ideas, designs, arrangements or plans may be used by or disclosed to any person, firm, or corporation without the written permission of Panda Express Inc.

REVISIONS:

ISSUE DATE:

1	95% SUBMITTAL	05/15/2020

DRAWN BY: MRM

PANDA PROJECT #: D7432
ARCH PROJECT #:

MARSHALL & BOLLWERK ENGINEERING, INC.
8681 Highway 92, Suite 400
Woodstock, Ga. 30189
p: (678) 795-0333, f: (678) 325-4559
e: mbe@mbeinc.net

GEORGIA REGISTERED No.PE038052 PROFESSIONAL ENGINEER MATTHEW R. MENCER
5/15/2020

PANDA EXPRESS
MINI-MALL - SPACE 115
INGERSOLL STREET
FT BENNING, GA

P-101
WASTE & VENT PLAN

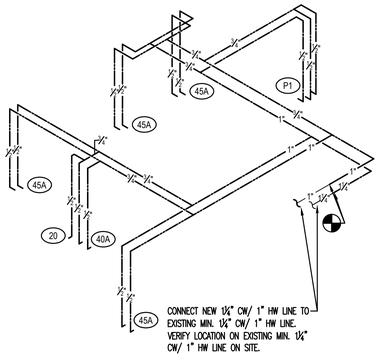

WATER RISER DIAGRAM | 11
NO SCALE | P-400

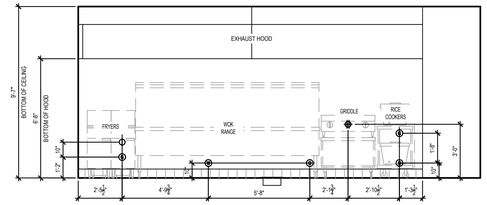

GAS COOKLINE ELEVATION | 4
NO SCALE | P-400

GAS EQUIPMENT SCHEDULE

ITEM	QTY	EQUIPMENT	MBH EACH	CFH EACH	CFH TOTAL
MU 1	1	MAKE-UP AIR UNIT	240	240	240
20	1	CHINESE RANGE	450	450	450
21G	2	DEEP FRYER	122	122	244
25A	2	RICE COOKER	35	35	70
TOTAL					1,004

LOW PRESSURE LP GAS CALCULATION:
SIZED PER 2018 IFGC TABLE 402.4(27)

TOTAL DEVELOPED LENGTH: 60'

TOTAL LOAD: 1,004 CFH

NOTE:
DO NOT RUN ANY PIPING HORIZONTAL IN WALL SPACE

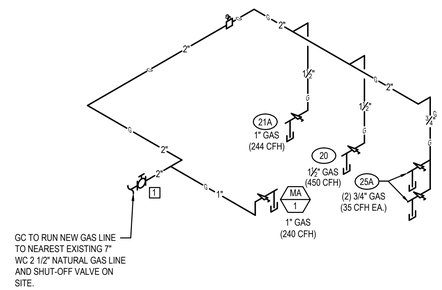

GAS RISER CODED NOTE:

1 COORDINATE PRV WITH LEAVIING PRESSURE FROM GAS METER

GAS RISER DIAGRAM | 3
NO SCALE | P-400

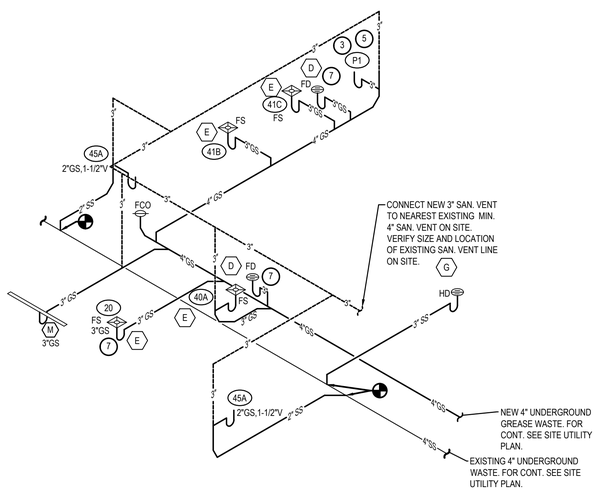

WASTE AND VENT RISER DIAGRAM | 9
NO SCALE | P-400

NOT USED | 5
NO SCALE | P-400

NOT USED | 1
NO SCALE | P-400

BID SET (2020/05/28) NOT FOR CONSTRUCTION

PANDA RESTAURANT GROUP INC.
1683 Walnut Grove Ave.
Rosemead, California
91770
Telephone: 626.799.9898
Facsimile: 626.372.8288

All ideas, designs, arrangement and plans indicated or represented by this drawing are the property of Panda Express Inc. and were created for use on this specific project. None of these ideas, designs, arrangements or plans may be used by or disclosed to any person, firm, or corporation without the written permission of Panda Express Inc.

REVISIONS:

ISSUE DATE:

1	95% SUBMITTAL	05/15/2020

DRAWN BY: MRM

PANDA PROJECT #: D7432
ARCH PROJECT #:

MARSHALL & BOLLWERK ENGINEERING, INC.
8681 Highway 92, Suite 400
Woodstock, Ga. 30189
p: (678) 795-0333, f: (678) 325-4559
e: mbe@mbeinc.net

GEORGIA No.PE038052 PROFESSIONAL ENGINEER MATTHEW R. MERCER
5/15/2020

PANDA EXPRESS
MINI-MALL - SPACE 115
INGERSOLL STREET
FT BENNING, GA

P-400

WATER, GAS WASTE & VENT RISER DIAGRAMS

NOTE: IF ROOF DRAIN DOES NOT DRAIN TO PARKING/DRIVE SURFACE, THEN CONDENSATE TO DRAIN TO ROOF DRAIN. IF ROOF DRAINS TO PARKING/DRIVE SURFACE, THEN CONDENSATE TO DRAIN TO FLOOR SINK INSIDE STORE.
MIN. TRAP DEPTH 4"; CENTERLINE OUTLET TO CENTERLINE DRAIN 1/2" PLUS UNIT TOTAL STATIC PRESSURE AS A MINIMUM. DISTANCE FROM OUTLET TO TRAP NOT LESS THAN 2 PIPE DIAMETERS.

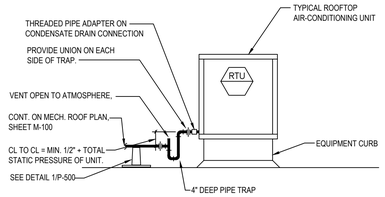

NOTE:
1. PIPING ARRANGEMENT SHOWN IS SCHEMATIC. ADJUST AS REQUIRED. VERIFY CONNECTION LOCATIONS BEFORE INSTALLING PIPE RUNS. DO NOT PROVIDE TRAP ON UNITS WHICH HAVE AN INTERNAL TRAP.
2. DRAIN LINES TO BE TYPE L COPPER.
3. FOR BLOW-THROUGH TYPE EQUIPMENT, ADJUST PTRAP DEPTH TO 1/2" PLUS TOTAL STATIC PRESSURE OF UNIT.

A.C. UNIT CONDENSATE DRAIN 16
Scale: NO SCALE P-500

OTHER VENTING METHODS MAY BE USED IF APPROVED BY LOCAL CODE.

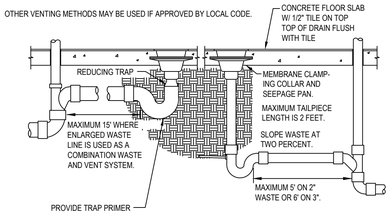

NOTE:
1. LOCATE FLOOR DRAIN/SINK WHERE SHOWN ON DIMENSIONED ARCHITECTURAL PLAN. IF FLOOR STRUCTURE INTERFERES WITH FLOOR SINK, MOVE SIDEWAYS IF POSSIBLE, OTHERWISE MOVE BACK. ALWAYS LOCATE WHERE EASILY ACCESSIBLE, BUT NOT IN FOOT TRAFFIC.
2. IF SITUATION IS FLOOR SLAB ON GRADE, PROVIDE BACKFILL PER SPECIFICATIONS. IF CONCRETE FLOOR IS NOT EXISTING, SET DRAIN IN PLACE AND POUR AROUND IT, OR BLOCK OUT AND POUR IN LATER.
3. IF CONCRETE FLOOR IS EXISTING, SAW CUT OR CORE DRILL IT. SET DRAIN BODY IN PLACE AND POUR AROUND IT.
4. TOP OF THE FLOOR SINK / DRAIN SHOULD BE SET AT THE SAME ELEVATION AS THE SLAB AND THEN DISHED OUT 2½" AT THE DRAIN SLOPING TO NOTHING AT THE 2' RADIUS POINT.
5. IF SITUATION IS FLOOR NOT ON GRADE, REFER TO "FLOOR PENETRATION" DETAIL FOR VENTS.
6. PROVIDE TRAP PRIMER FOR FLOOR DRAINS IN RESTROOMS.

FLOOR DRAIN/SINK 8
Scale: NO SCALE P-500

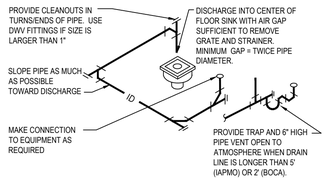

NOTE:
1. ROUTE PIPE INCONSPICUOUSLY AND UNOBTRUSIVELY.
2. HANG PIPE AS REQUIRED.
3. DO NOT INSULATE INDIRECT DRAIN PIPE WHEN INSTALLED IN FOOD SERVICE FACILITY. REFER TO LOCAL CODES FOR FURTHER INFORMATION.

INDIRECT DRAIN 15
Scale: NO SCALE P-500

PROVIDE ROUND SECURED NICKEL BRONZE ADJUSTABLE TOP WITH "CO" CAST IN COVER. PROVIDE CLEANOUT TOP WITH VARIATIONS SUITABLE FOR FLOOR COVERING (CARPET MARKER, RECESSED FOR TILE, SCORIATED FOR UNFINISHED FLOORS). PROVIDE PLASTIC PLUG IN CAST IRON BODY. CLEAN THE TOP OF EXPOSED FCO AFTER INSTALLATION.

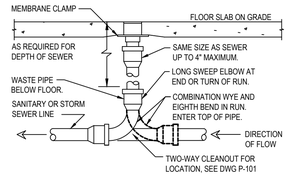

NOTE:
1. LOCATE AT BUILDING EXIT, AT ENDS OF RUNS, AT TURNS OF PIPE GREATER THAN 45 DEGREES, AT 50' INTERVALS ON STRAIGHT RUNS, AND WHERE SHOWN ON PLANS.
2. PROVIDE BACKFILL PER ARCHITECTURAL SPECIFICATIONS.
3. LOCATE CLEANOUTS WHERE THERE IS 18" CLEAR AROUND.
4. CONSULT LOCAL CODES FOR OTHER FCO REQUIREMENTS.

FLOOR CLEANOUT 11
Scale: NO SCALE P-500

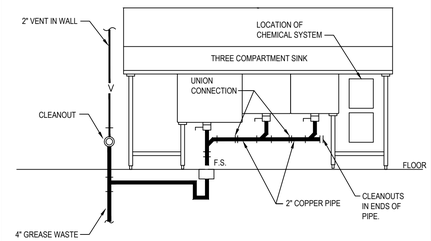

NOTE:
1. ARRANGEMENT SHOWN IS SCHEMATIC. ADJUST TO SUIT FIELD CONDITIONS OR MEET LOCAL CODE REQUIREMENTS.
2. PROVIDE COPPER PIPE, FITINGS AND CONNECTORS ALL AROUND SINK AND TRAP.
3. CONNECT TRAP FROM CENTER COMPARTMENT.

UTILITY/SINK 7
Scale: NO SCALE P-500

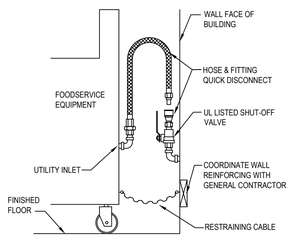

NOTE:
1. IF UTILITY IS NOT AT FULL HEIGHT SHOWN, PROVIDE PIPING WITH ELBOWS TO RAISE INLET

QUICK DISCONNECT 18
Scale: NO SCALE P-500

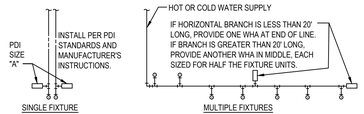

PDI SIZE	PIPE SIZE	FIXTURE UNIT LOAD
A	1/2"	1-11
B	3/4"	12-32
C	1"	33-60
D	1-1/4"	61-113
E	1-1/2"	114-154
F	2"	154-330

FIXTURE UNIT TABULATION		
FIXTURE	COLD	HOT
VALVE WATER CLOSET	10	--
TANK WATER CLOSET	5	--
URINAL	5	--
LAVATORY/SINK	1.5	1.5
JANITOR'S SINK	3	3
SHOWER/BATHTUB	2	2

NOTE:
1. DO NOT PROVIDE AIR CHAMBERS.
2. PROVIDE WATER HAMMER ARRESTERS BY SIOUX CHIEF, PRECISION PLUMBING PRODUCTS, WATTS OR APPROVED EQUIVALENT WITH PISTON AND 0-RING CONSTRUCTION, HAVING PDI #WH- 201, ASSE # 1010 AND ANSI # A112.26.1M CERTIFICATION.
3. INSTALL IN HORIZONTAL OR VERTICAL POSITION, BUT NEVER UPSIDE DOWN.
4. INSTALL IN LINE WITH WATER FLOW DIRECTION IF POSSIBLE.
5. SIZE THE UNITS AS SHOWN ON THE DRAWINGS AND/OR PER THE TABLES SHOWN ABOVE.

WATER HAMMER ARRESTERS 14
Scale: NO SCALE P-500

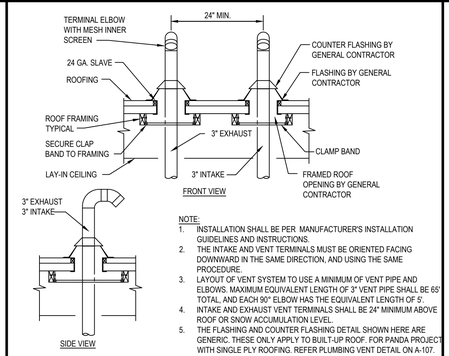

NOTE:
1. INSTALLATION SHALL BE PER MANUFACTURER'S INSTALLATION GUIDELINES AND INSTRUCTIONS.
2. THE INTAKE AND VENT TERMINALS MUST BE ORIENTED FACING DOWNWARD IN THE SAME DIRECTION, AND USING THE SAME PROCEDURE.
3. LAYOUT OF VENT SYSTEM TO USE A MINIMUM OF VENT PIPE AND ELBOWS. MAXIMUM EQUIVALENT LENGTH OF 3' VENT PIPE SHALL BE 65' TOTAL, AND EACH 90° ELBOW HAS THE EQUIVALENT LENGTH OF 5'.
4. INTAKE AND EXHAUST VENT TERMINALS SHALL BE 24" MINIMUM ABOVE ROOF OR SNOW ACCUMULATION LEVEL.
5. THE FLASHING AND COUNTER FLASHING DETAIL SHOWN HERE ARE GENERIC. THESE ONLY APPLY TO BUILT-UP ROOF. FOR PANDA PROJECT WITH SINGLE PLY ROOFING. REFER PLUMBING VENT DETAIL ON A-107.

WH DIRECT VENT DETAIL 10
Scale: NO SCALE P-500

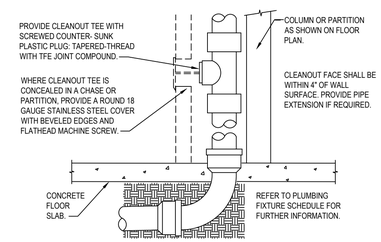

NOTE:
1. PROVIDE WCO WHERE SHOWN ON PLAN. LOCATE ABOVE FIXTURE FLOOD RIM .
2. CONSULT LOCAL CODES FOR OTHER WCO REQUIREMENTS.

WALL CLEANOUT 6
Scale: NO SCALE P-500

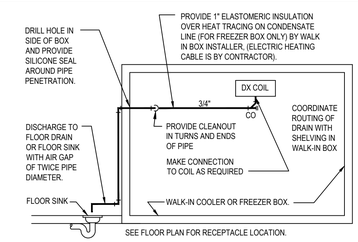

NOTE:
1. INSTALL PIPE A MINIMUM OF 76" ABOVE FINISH FLOOR , ANCHORED TO WALL OF BOX WITH SUPPORTS AT MAXIMUM SIX FOOT CENTERS.
2. USE TYPE "M" HARD COPPER TUBE AND FITTINGS WITH LEAD-FREE SOLDER JOINTS.
3. COPE HORIZONTAL PIPE AT MINIMUM TWO PERCENT.
4. KEEP DRAIN LINE FROM EVAPORATOR AS HIGH AS POSSIBLE UNDER THE EVAPORATOR BACK TO THE WALL TO MAXIMIZE SHELF SPACE UNDER THE COIL.
5. REFER TO LOCAL CODE FOR INDIRECT DRAIN REQUIREMENTS.

WALK - IN BOX CONDENSATE DRAIN 2
Scale: NO SCALE P-500

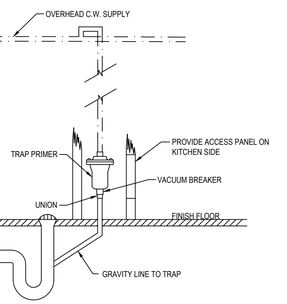

PREP. AREA TRAP PRIMER DETAIL 17
Scale: NO SCALE P-500

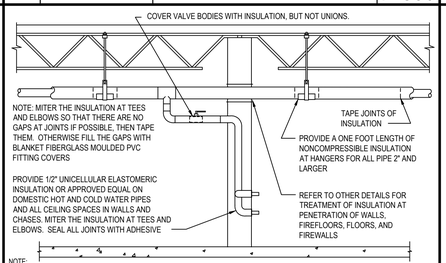

NOTE:
1. PROVIDE 1/2" PLENUM RATED ELASTOMERIC INSULATION WITH ALL-SERVICE JACKET WITH VAPOR BARRIER OR APPROVED EQUAL ON ALL COLD WATER, CONDENSATE UP TO 2".
2. PROVIDE 1"PLENUM RATED ELASTOMERIC INSULATION WITH ALL-SERVICE JACKET OR APPROVED EQUAL ON DOMESTIC HOT WATER PIPING.
3. REFER TO SPECIFICATIONS FOR FURTHER INFORMATION REGARDING INSULATION. INSTALL ALL ITEMS PER SPECIFICATIONS AND MANUFACTURER'S INSTRUCTIONS.
4. MAINTAIN VAPOR BARRIER ON COLD PIPING BY MEANS OF SEALANT AND TAPE.
5. FLAME-SPREAD AND SMOKE-DEVELOPED INDEXES SHALL NOT EXCEED 25/50.
6. SEAL EXPOSED ENDS OF INSULATION WITH ADHESIVE MASTIC.

PIPE INSULATION 13
Scale: NO SCALE P-500

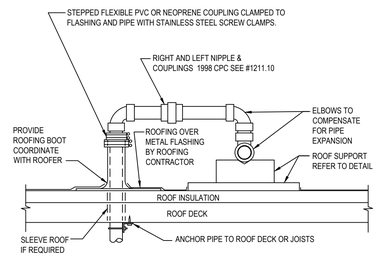

NOTE:
1. REFER TO PLANS FOR PIPE SIZE(S) AND LOCATION(S).
2. WELDED OR SCREWED FITTINGS AS SPECIFIED FOR PIPE SIZE.
3. LOCATE PENETRATION MINIMUM 18" FROM ADJACENT WALLS.

GAS PIPE ROOF PENETRATION 5
Scale: NO SCALE P-500

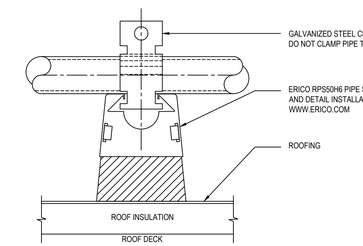

NOTE:
1. LOCATE AT TURNS OF PIPE, AT 4' SPACING FOR PLASTIC PIPE, AND AT THIS SPACING FOR METAL PIPE: .5"=16' .4"=14' .3"=12' .2-1/2"=11' .2"=10' 1-1/2"=9' 1-1/4"=8' 1"=7' 3/4"=6'. PLACE BASE SHEETS ON ROOFING BEFORE GRAVEL IF ANY. SET BLOCKS FREE ON BASE SHEETS. STACK BLOCKS AND NAIL THEM TOGETHER WHERE REQUIRED TO ELEVATE PIPING.
2. PRIMER COAT AND PAINT EXTERIOR GAS PIPE SAFETY YELLOW COLOR.
3. 18"x18"x1/2" THICK ROOF WALKWAY MATERIAL FOR BASE SHEET. ("CAREY-TRED" OR PER ARCHITECTURAL SPECIFICATIONS.)

ROOF PIPE SUPPORT 1
Scale: NO SCALE P-500

[redacted]

PANDA EXPRESS CHINESE KITCHEN

PANDA RESTAURANT GROUP INC.
1683 Walnut Grove Ave.
Rosemead, California
91770
Telephone: 626.799.9898
Facsimile: 626.372.8288

[redacted]

All ideas, designs, arrangement and plans indicated or represented by this drawing are the property of Panda Express Inc. and were created for use on this specific project. None of these ideas, designs, arrangements or plans may be used by or disclosed to any person, firm, or corporation without the written permission of Panda Express Inc.

[redacted]

REVISIONS:

ISSUE DATE:

1	95% SUBMITTAL	05/15/2020

[redacted]

DRAWN BY: MRM

[redacted]

PANDA PROJECT #: D7432
ARCH PROJECT #:

[redacted]

MARSHALL & BOLLWERK ENGINEERING, INC.
8881 Highway 92, Suite 400
Woodstock, Ga. 30189
p: (678) 795-0333, f: (678) 325-4559
e: mbe@mbeinc.net

[redacted]

GEORGIA No.PE038052 PROFESSIONAL ENGINEER MATTHEW R. MENCER
5/15/2020

[redacted]

PANDA EXPRESS
MINI-MALL - SPACE 115
INGERSOLL STREET
FT BENNING, GA

[redacted]

P-500
PLUMBING DETAILS

[redacted]

BID SET (2020/05/28) NOT FOR CONSTRUCTION

ELECTRICAL SPECIFICATIONS

PART 1 - GENERAL

1.01 COORDINATION OF TRADES: SCHEDULE AND COORDINATE WORK WITH THAT OF OTHER DIVISIONS AND SECTIONS.
1.02 GUARANTEE IN WRITING THE ELECTRICAL INSTALLATION, AND ALL WORK UNDER THIS SECTION, FOR A PERIOD OF ONE YEAR FROM THE DATE OF FINAL ACCEPTANCE BY THE OWNER AGAINST ALL EVIDENCE OF IMPERFECT WORKMANSHIP OR FAILURE OR MALFUNCTION OF MATERIALS.

PART 2 - PRODUCTS

2.01 MATERIALS AND EQUIPMENT
A. MATERIAL FURNISHED UNDER THIS CONTRACT, UNLESS OTHERWISE NOTED, SHALL BE NEW, FREE FROM DEFECTS AND SHALL CONFORM WITH THE STANDARDS OF UL.
B. VOLTAGE, AMPERE, AND OTHER RATINGS OF EQUIPMENT SHALL BE SUITABLE FOR USE INTENDED. DISCONNECT SWITCHES SHALL BE PROPERLY HORSEPOWER RATED AND SUITABLE FOR VOLTAGE, AND AMPERE RATING OF LOAD
C. THE DRAWINGS GENERALLY INDICATE THE RACEWAY SIZE, THE NUMBER, SIZE, AND INSULATION TYPE OF CONDUCTORS TO BE PROVIDED AND INSTALLED. WHERE THESE ITEMS DO NOT MEET MINIMUM APPLICABLE CODES, FOR EQUIPMENT BEING SERVED, COMPLY AS REQUIRED AT NO ADDITIONAL COST.
2.02 RACEWAYS
A. GALVANIZED RIGID CONDUIT (GRC); INCLUDING ELBOWS AND COUPLINGS.
B. INTERMEDIATE METAL CONDUIT (IMC); INCLUDING ELBOWS AND COUPLINGS.
C. ELECTRIC METALLIC TUBING (EMT) WITH FITTINGS OF PRESSED STEEL OR MALLEABLE IRON, COMPRESSION TYPE WITH INSULATED THROATS.
D. RIGID NON-METALLIC CONDUIT: (PVC) U.L. LABELED SCHEDULE 40 P.V.C.
2.03 DEVICE AND JUNCTION BOXES: INCLUDE PLASTER RINGS, COVERS, AND KO SEALS AS REQUIRED.
2.04 WIRE AND CABLE: UNLESS OTHERWISE NOTED, WIRE AND CABLE SHALL BE SOFT DRAWN, ANNEALED COPPER. WIRE SIZES NO. 8 AND LARGER AND CONDUCTORS SERVING MOTORS AND SUBJECT TO VIBRATIONS SHALL BE STRANDED CABLE. INSULATION TO BE THWN/THHN, JACKETED 90C INSULATED WIRE. PROVIDE WIRE COLOR IDENTIFICATION: NEUTRAL WIRE - WHITE, LIVE WIRE - BLACK, RED, BLUE ON 120/208 VOLT SYSTEM; NEUTRAL WIRE - GREY, LIVE WIRE - BROWN, ORANGE YELLOW ON 277/480 VOLT SYSTEM; GROUND - GREEN.
2.05 ADDED PANELS TO BE PANELBOARDS - LOAD CENTERS ARE NOT ACCEPTABLE UNLESS SPECIFICALLY APPROVED.
2.06 SERVICE ENTRANCE AND DISTRIBUTION GEAR BY G.E., SQUARE "D", CUTLER HAMMER/SIEMENS ONLY. INTERIOR PANELBOARDS SHALL BE RECESSED WITH FLANGED/REMOVABLE SCREW-ON COVER. SURFACE MOUNTED PANELBOARDS OR HINGED/FLUSH COVERS NOT ALLOWED.
2.07 SWITCHBOARDS: COPPER BUSSING WITH FULL CAPACITY NEUTRAL. ALUMINUM ALLOWED WHEN APPROVED BY ARCHITECT.
2.11 120/208 VOLT AND 277/480 VOLT PANELBOARDS: 3 PHASE, 4 WIRE, COPPER BUS, COMPOSED OF AN ASSEMBLY OF BOLT-IN-PLACE MOLDED CASE CIRCUIT BREAKERS WITH THERMAL AND MAGNETIC TRIP AND TRIP FREE POSITION SEPARATE FROM EITHER ON OR OFF POSITIONS.
2.13 SAFETY SWITCHES: FUSED, HEAVY DUTY, HORSEPOWER RATED.
2.14 STARTERS, CONTACTORS AND CONTROL DEVICES: PROVIDE AS SHOWN AND AS REQUIRED BY CODE. FURNISH COMPLETE WITH PILOT LIGHTS, AUXILIARY CONTACTS, PUSH BUTTONS, HAND-OFF-ON SWITCHES, CONTROL DEVICES, AND OVERLOAD RELAYS. THERMAL OVERLOADS TO BE SIZED PER MANUFACTURERS RECOMMENDATIONS. AMBIENT COMPENSATE ALL HEATERS EXPOSED TO HIGH TEMPERATURE OR INSTALLATION OUTSIDE.
2.16 NAMEPLATES: PROVIDE BLACK LAMICOID NAMEPLATES WITH 3/16" HIGH WHITE ENGRAVED LETTERS ON PANELS, SWITCHBOARDS, MAINS AND SUBMAINS, DISTRIBUTION EQUIPMENT, REMOTE SAFETY SWITCHES, CIRCUIT BREAKERS, TIME SWITCHES, CONTACTORS, AND STARTERS.
2.17 WIRING DEVICES
A. HUBBELL OR COMPARABLE LEVITON OR BRYANT: WHITE AND GREY IN COLOR - AS NOTED ON DRAWINGS. 15 AMP DEVICES ALLOWED ONLY WHEN SPECIFICALLY DENOTED ON ELECTRICAL CONSTRUCTION DRAWINGS.
B. TOGGLE SWITCHES: SINGLE POLE - HUBBELL 1221- 20A, 120/277V, THREE WAY - HUBBELL 1223- 20A, 120/277V, FOUR WAY - HUBBELL 1224- 20A, 120/277V.
C. RECEPTACLES: DUPLEX GROUNDING TYPE, SPECIFICATION GRADE, 125 VOLT, 20 AMPERES, SINGLE PHASE, HUBBELL NO. 5262 OR COMPARABLE.
D. GROUND FAULT INTERRUPTER TYPE RECEPTACLE: DUPLEX GROUNDING TYPE, SPECIFICATION GRADE, 125 VOLT, 20 AMPERES, SINGLE PHASE, 5 mA GROUND TRIP, FEED THROUGH CONSTRUCTION.
2.18 DEVICE PLATES: LEXAN (STA-KLEEN), SMOOTH FINISH IN STAINLESS STEEL AND WHITE - AS NOTED ON PLANS. MULTI-GANG OUTLET PLATES SHALL BE USED FOR MULTI-GANG BOXES.
2.19 NOT USED.
2.20 LIGHTING FIXTURES
A. PROVIDE FIXTURES PER SCHEDULE WITH ALL PARTS INCLUDING PLASTER FRAMES FOR RECESSED FIXTURES AND FITTINGS NECESSARY TO COMPLETELY AND PROPERLY INSTALL FIXTURES.
B. LAMPS: INCANDESCENT LAMPS BY G.E., SYLVANIA, OR WESTINGHOUSE, 130 VOLT, EXTENDED LIFE LAMPS. FLUORESCENT LAMPS BY G.E., SYLVANIA, PHILLIPS, OR WESTINGHOUSE. MINIMUM CRI OF 80. WATTAGE AND TYPES AS REQUIRED BY FIXTURE.

PART 3 - EXECUTION

3.01 GENERAL INSTALLATION
A. THE ENTIRE ELECTRICAL INSTALLATION SHALL BE MADE IN A NEAT, APPROVED, FINISHED, AND SAFE MANNER.
B. INSPECT AND MAKE TIGHT ALL CONNECTIONS FOR ALL EQUIPMENT, INCLUDING FACTORY CONNECTIONS. TORQUE ALL CONNECTIONS PER MANUFACTURER'S RECOMMENDATIONS.
C. LIGHTING FIXTURES INSTALLED AND USED FOR LIGHTING DURING CONSTRUCTION SHALL BE RELAMPED WITH NEW LAMPS JUST PRIOR TO FINAL ACCEPTANCE OF THE PROJECT.
D. INSTALL SEISMIC RESTRAINT DEVICES FOR ALL CEILING MOUNTED EQUIPMENT, I.E. FLUORESCENT LAY-IN FIXTURES. PROVIDE GRID CLIPS AND #12 SLACK WIRES FROM FIXTURE CORNERS TO STRUCTURE.
3.02 RACEWAYS
A. INSTALL COMPLETE RACEWAY SYSTEMS FOR ALL ELECTRICAL CONDUCTORS INCLUDING TELEPHONE, SIGNAL, CONTROL, AND OTHER SYSTEMS.
B. UNLESS OTHERWISE NOTED, INSTALL ALL RACEWAYS CONCEALED. WHERE IT IS NOT FEASIBLE TO CONCEAL RACEWAYS, INSTALL AS DIRECTED BY ARCHITECT.
C. INSTALL EXPOSED RACEWAYS TO RUN PARALLEL OR AT RIGHT ANGLES TO STRUCTURAL BUILDING LINES WITH NEAT BENDS AND NEATLY OFFSET INTO TERMINATIONS.
D. IN EMPTY RACEWAY PROVIDE AND INSTALL A NO. 14 NYLON DRAG LINE.
E. INSTALL RACEWAYS WITH APPROVED HEAVY DUTY SUPPORTS, STRAPS, HANGERS, CONNECTORS, AND COUPLINGS AS REQUIRED TO MAINTAIN AN APPROVED INSTALLATION.
F. DO NOT INSTALL CONDUIT RACEWAYS IN CONCRETE SLABS.
H. MINIMUM CONDUIT SIZE TO BE 3/4" U.N.O.
3.03 GALVANIZED RIGID CONDUIT (GRC) ALL RACEWAYS SHALL BE GRC EXCEPT AS NOTED OR SHOWN. CONDUIT, ELBOWS, STANDARD COUPLINGS SHALL BE HOT DIPPED GALVANIZED RIGID STEEL. IF PARTITIONS OR WALLS ARE SOLID CONCRETE OR ARE GROUTED SOLID WITH CONCRETE OR MORTAR, RIGID STEEL CONDUIT SHALL BE USED.
3.04 INTERMEDIATE METAL CONDUIT (IMC) IMC RACEWAY AND APPROVED FITTINGS WHERE PERMITTED BY APPLICABLE CODES AND REGULATIONS MAY BE USED IN LIEU OF RIGID STEEL CONDUIT, WHERE INSTALLED ABOVE FINISH GRADE AND ABOVE CONCRETE SLABS ON GRADE.
3.05 ELECTRIC METALLIC TUBING (EMT) EMT MAY BE USED WHERE CONCEALED IN AREAS ABOVE CEILINGS, FURRED SPACES, PARTITIONS OR WALLS. ALSO MAY BE EXPOSED, WHEN NOT IN HAZARDOUS AREAS, AREAS SUBJECT TO PHYSICAL DAMAGE, OR WHEN DIRECTLY EXPOSED TO RAIN OR WASH-DOWN.
3.06 FLEXIBLE METAL CONDUIT (FLEX) USE FLEXIBLE CONDUITS FOR CONNECTIONS TO MOTORS, WHERE SUBJECT TO MOVEMENT OR VIBRATION, AND LIQUID TIGHT WHERE EXPOSED TO MOISTURE OR OIL.
3.07 RIGID NONMETALLIC CONDUIT PVC SCHEDULE 40 MAY BE INSTALLED FOR DIRECT BURIAL RACEWAYS WHERE INSTALLED WITH MINIMUM COVERAGE PER NEC TABLE 300-5.
3.08 OUTLET, PULL AND JUNCTION BOXES
A. UNLESS OTHERWISE SHOWN OR AS DIRECTED PRIOR TO INSTALLATION, OUTLET BOXES SHALL GENERALLY BE PLACED AT THE FOLLOWING HEIGHTS, CENTER OF BOX TO FINISHED FLOOR LEVEL.
B. WALL SWITCHES: 44".
C. CONVENIENCE RECEPTACLES: 18" (OR 4" ABOVE COUNTERS) AND/OR AS NOTED. (SIMILAR TYPE OUTLETS SHALL BE MOUNTED AT SAME HEIGHT IN EACH AREA). GROUNDING PIN AT TOP.
3.09 CONDUCTORS (COPPER ONLY)
A. USE SPECIFIED COLOR SCHEDULE FOR ALL WIRING. WHERE LARGE CONDUCTORS ARE NOT AVAILABLE IN COLORS, IDENTIFY WITH PERMANENT COLORED TAPE AT ALL TERMINATIONS, JUNCTION BOXES, ETC. COLOR CODING PER NEC.
B. MAKE TAPS, JOINTS, SPLICES, AND OTHER CONNECTIONS WITH FIXTURE CONNECTORS.
C. DO NOT INSTALL WIRING OR PULL WIRES, IN RACEWAYS UNTIL RACEWAY SYSTEM IS COMPLETE, CLEAN AND DRY AND FREE OF ALL FOREIGN MATERIALS. LUBRICATE AS REQUIRED WITH SPECIFIED LUBRICANT.
D. MINIMUM CONDUCTOR SIZE TO BE #12 CU. THWN.
3.10 LIGHTING FIXTURES
A. LEAVE FIXTURES AND LAMPS CLEAN OF ALL DIRT, DUST, GREASE SPOTS AND DEBRIS AND ALL GLASS, PLASTIC AND OTHER COMPONENTS, UNSCRATCHED AND UNBROKEN.
B. FIT AND ADJUST ALL FIXTURES. WHERE STRUCTURAL CONDITIONS, PARTITIONS, FURNITURE, SHELVING, AND AIR CONDITIONING DIFFUSERS INTERFERE WITH THE LIGHTING FIXTURES AT LOCATIONS SHOWN, NOTIFY ARCHITECT IN WRITING AND RELOCATE AT NO ADDITIONAL COST AS DIRECTED.
C. FIXTURES WITH FINISH TRIM OR LENS FRAMES SHALL BE GASKETED AND BAFFLED TO PREVENT LIGHT LEAKS. INSTALL SO THAT NO LIGHT LEAKS EXIST. D. FIXTURES MOUNTED DIRECTLY ON COMBUSTIBLE LOW-DENSITY CEILINGS SHALL BE UL APPROVAL FOR THIS CONDITION AND BE PLAINLY MARKED SO INDICATING.
3.11 GROUNDING
A. GROUNDING FOR DISTRIBUTION EQUIPMENT, EQUIPMENT AND MATERIALS WITH ELECTRICAL CONNECTIONS, ELECTRIC MOTOR FRAMES, ELECTRIC RACEWAY AND RELATED EQUIPMENT, SHALL BE EFFECTIVELY AND PERMANENTLY GROUNDED IN ACCORDANCE WITH PERTINENT SECTIONS OF ARTICLE 250 OF NEC. RESISTANCE TO GROUND SHALL NOT EXCEED 10 OHMS.
B. ALL RACEWAYS SHALL HAVE AN APPROVED SIZED, INSULATED, STRANDED COPPER GROUNDING TYPE CONDUCTOR.
C. WHERE RACEWAYS CONNECT TO A CONCENTRIC K.O. PROVIDE GROUNDING LOCKNUT OR BUSHING AND BOND WIRE EXTENDED AND BONDED TO ENCLOSURE, SIZE AS PER NEC.
3.12 DITCHING, EXCAVATION AND BACKFILLING: PERFORM ALL DITCHING, EXCAVATION AND BACKFILLING REQUIRED FOR THE ELECTRICAL WORK. PROVIDE AND MAINTAIN ALL SHEATHING, BRACING AND PROPER GUARDS FOR PREVENTION OF ACCIDENTS.
3.13 UTILITY COMPANY SERVICE CONTRACTOR TO BE RESPONSIBLE FOR COORDINATING AND PROVIDING REQUIRED WORK FOR SUPPLYING ELECTRICAL POWER AND COMMUNICATIONS UTILITIES TO THE PROJECT.
3.14 FINAL INSPECTION TESTS TEST SYSTEM FOR SHORTS AND GROUNDS. FAULTY WIRING SHALL BE REMOVED AND REPLACED. AFTER SYSTEM IS CONNECTED COMPLETE, TEST FOR INSULATION RESISTANCE. RESISTANCE LOWER THAN OUTLINED IN THE NEC, MANUFACTURER'S DATA, ETC., SHALL BE REMOVED AND REPLACED. ANY DEVICE, APPARATUS OR FIXTURE UNDER THIS CONTRACT SHOWING SUBSTANDARD READINGS SHALL BE REMOVED AND REPLACED AS DIRECTED BY THE ARCHITECT.
3.15 LABEL ALL RECEPTACLES WITH 3/16" HIGH BLACK LETTERING ON CLEAR TAPE. IF THE RECEPTACLE IS BLACK OR BROWN, PROVIDE WHITE LETTERING ON CLEAR TAPE. LABEL TO BE NEATLY CENTERED IN THE TOP SPACE OF THE COVERPLATE, AND INDICATE THE SERVING PANEL AND CIRCUIT ORIGIN.

GENERAL NOTES

1. THE ELECTRICAL DRAWINGS, SPECIFICATIONS AND GENERAL NOTES DESCRIBE THE RECOMMENDED SCOPE OF WORK AND THE DOCUMENTS SHALL BE USED FOR THE PURPOSE OF BIDDING, BUILDING DEPARTMENT REVIEW, AND TO SECURE THE NECESSARY CONSTRUCTION PERMIT ONLY.
2. BRANCH CONTROL CIRCUITING AND WIRE COUNT MAY NOT BE INDICATED ON THESE PLANS. CONTRACTOR IS RESPONSIBLE TO COMPLETE THE BRANCH CIRCUIT WIRING IN ACCORDANCE WITH PLAN NOTES AND AS PERMITTED BY AUTHORITY. CONTRACTOR SHALL SUBMIT AS-BUILT DRAWINGS AS A PART OF RECORD DRAWING SUBMITTAL TO ARCHITECT AND AUTHORITY HAVING JURISDICTION (AHJ).
3. ELECTRICAL INSTALLATION SHALL COMPLY WITH THE LOCALLY ADOPTED, AS NATIONAL ELECTRICAL CODE ADAPTED BY THE JURISDICTION AND ANY LOCAL SUPPLEMENTS.
4. ALL EQUIPMENT SHOWN IS NEW, CONTRACTOR FURNISHED AND INSTALLED, UNLESS OTHERWISE NOTED. IF CONTRACTOR PROPOSED TO SUBSTITUTE SPECIFIC EQUIPMENT SPECIFIED, HE SHALL SUBMIT HIS REQUEST FOR CONSIDERATION TO THE OWNER AND ENGINEER PRIOR TO THE BID IN WRITING. ALL SUBSTITUTIONS MUST BE REVIEWED BY THE ENGINEER. SUCH REVIEW SHALL NOT RELIEVE THE CONTRACTOR FROM COMPLYING WITH THE REQUIREMENTS OF THE DRAWINGS AND SPECIFICATIONS. THE CONTRACTOR SHALL BE RESPONSIBLE AT HIS OWN EXPENSE FOR ANY CHANGE RESULTING FROM HIS PROPOSED SUBSTITUTIONS WHICH AFFECT OTHER PARTS OF HIS OWN WORK, OR SUBSTITUTIONS WHICH AFFECT OTHER PARTS OF HIS OWN WORK OR THE WORK OF OTHER CONTRACTORS.
5. THE ELECTRICAL DRAWINGS, CONDUIT RUNS, WIRING AND ELECTRICAL INFORMATION ARE DIAGRAMMATIC ONLY. DO NOT SCALE THE ELECTRICAL DRAWINGS TO DETERMINE THE LOCATION OF EQUIPMENT OR OUTLETS.
6. REFER TO THE ARCHITECTURAL REFLECTED CEILING PLAN FOR EXACT LOCATIONS OF ALL LIGHTING FIXTURES, CEILING MOUNTED OUTLETS AND EQUIPMENT.
7. ALL DEVICE MOUNTING HEIGHTS AND EXACT LOCATIONS SHALL BE COORDINATED WITH ARCHITECTURAL DRAWINGS AND ELEVATIONS PRIOR TO ROUGH-IN.
8. IT SHALL BE THE CONTRACTOR'S RESPONSIBILITY TO VERIFY TYPES OF CEILING SYSTEM. FIXTURES LOCATED IN DAMP OR WET LOCATIONS SHALL BE LISTED AND LABELED FOR USE IN SUCH LOCATIONS.
9. ALL RECESSED LIGHTING FIXTURES, PANELBOARDS, SWITCHES, ETC., MOUNTED IN FIRE RATED STRUCTURES SHALL BE ENCLOSED WITH AN APPROVED ENCLOSURE CARRYING THE SAME FIRE RATING AS THE STRUCTURE.
10. PORTIONS OF THE CEILING SYSTEMS MAY BE INACCESSIBLE, THEREFORE, THE CONTRACTOR SHALL STRATEGICALLY LOCATE ACCESS BOXES, ETC., WHICH SHALL BE READILY ACCESSIBLE. ALL LIGHTING FIXTURE WIRING, BALLASTS, J-BOXES, ETC. SHALL BE ACCESSIBLE FROM FIXTURE OPENING.
11. ALL WIRING AND ELECTRICAL EQUIPMENT INSTALLED FOR MECHANICAL AND PLUMBING EQUIPMENT SHALL BE IN ACCORDANCE WITH MECHANICAL AND PLUMBING SPECIFICATIONS AND ASSOCIATED DRAWINGS. CONTRACTOR SHOULD OBTAIN THE REQUIRED MECHANICAL AND PLUMBING DRAWINGS AND PROVIDE ALL EQUIPMENT, RACEWAYS, WIRING, ETC., AS INDICATED THEREON AS PROVIDED UNDER THE ELECTRICAL WORK.
12. ALL FINAL CONNECTIONS TO OWNER FURNISHED EQUIPMENT SHALL BE MADE BY THE CONTRACTOR, UNLESS OTHERWISE NOTED. VERIFY ELECTRICAL CHARACTERISTICS AND U.L. LISTING PRIOR TO CONNECTION.
13. THE CONTRACTOR SHALL VERIFY THE LOAD INPUT VOLTAGE OF ALL EQUIPMENT PRIOR TO INSTALLATION. ACCEPTING ANY EQUIPMENT RESULTING IN A LOAD INCREASE SHALL BE THE RESPONSIBILITY OF CONTRACTOR.
14. ELECTRICAL OUTLETS ON OPPOSITE SIDES OF FIRE RATED WALLS AND PARTITIONS MUST BE SEPARATED BY DISTANCE OF 24 IN. HORIZONTALLY, IN ACCORDANCE WITH I.B.C. SEC. 711.3.2. OPENINGS IN FIRE RATED WALLS GREATER THAN 16 SQ. IN. MUST BE FIRE STOPPED.
15. PROVIDE AN ADDITIONAL JUNCTION BOX (SIZE AS REQUIRED) WHERE THE NUMBER OF CONDUCTORS EXCEEDS THE MAXIMUM ALLOWED FOR A GIVEN JUNCTION POINT OR OUTLET.
16. CONDUCTORS SHALL BE COPPER THHN/THWN 600 VOLT INSULATION UNLESS OTHERWISE NOTED. USE PROPER TEMPERATURE RATING OF CONDUCTORS BASED ON THE AMBIENT AIR TEMPERATURE WHERE CONDUCTORS ARE BEING USED. HIGHER AMPACITY CONDUCTOR AND LARGER RACEWAY SHALL BE PROVIDED TO OFFSET THE AMPACITY CORRECTION FACTORS AS INDICATED IN NEC TABLE 310 AND ELSEWHERE IN CODE.
17. ALL FLUORESCENT BALLASTS AND LAMPS SHALL BE CALIFORNIA ENERGY COMMISSION(CEC) CERTIFIED ENERGY SAVING TYPE.
18. DO ALL DRILLING, CUTTING, CHANNELING AS REQUIRED FOR ELECTRICAL WORK AND INDICATED OR HEREIN SPECIFIED. ALL HOLES, CURBS, ETC., IN FLOORS, CEILINGS AND WALLS SHALL BE PATCHED, UNLESS INDICATED OTHERWISE. PAINT ALL EXPOSED ELECTRICAL RACEWAYS, CABINETS, ENCLOSURES AND FITTING TO MATCH IN COLOR TO ADJACENT SURFACES IN FINISHED AREAS. (PROTECT UL LISTINGS LABELS FROM PAINT).
19. SEAL ALL PENETRATIONS THROUGH FIRE RATED WALLS, CEILINGS, FLOORS, ETC., TO MAINTAIN THE FIRE RATING. FURNISH AND INSTALL FIRE RATED ENCLOSURE FOR ALL EQUIPMENT PENETRATING INTO FIRE RATED ENVELOPS, SPACES ETC.
20. EMERGENCY LIGHTING SHALL BE PROVIDED PER U.B.C. AND SHALL BE DESIGNED TO PROVIDE MINIMUM REQUIRED FOOTCANDLES AND LUMENS. PROVIDE ADDITIONAL EMERGENCY ILLUMINATION AS REQUIRED BY INSPECTION AUTHORITIES HAVING JURISDICTIONS.
21. ALL ELECTRICAL EQUIPMENT SHALL BE BRACED OR ANCHORED TO RESIST A HORIZONTAL FORCE ACTING IN ANY DIRECTION USING THE FOLLOWING CRITERIA. [NON HEALTH CARE FACILITY INCLUDE OSHPD NOTES FOR HEALTH CARE FACILITY]

FIXED EQUIPMENT ON GRADE:	33% OF OPERATING WEIGHT
FIXED EQUIPMENT ON STRUCTURE:	50% OF OPERATING WEIGHT
EMERGENCY POWER & COMMUNICATION & EQUIPMENT ON GRADE:	50% OF OPERATING WEIGHT
EMERGENCY POWER & COMMUNICATION ON STRUCTURE:	75% OF OPERATING WEIGHT

FOR FLEXIBLE MOUNTED EQUIPMENT USE 2 X THE ABOVE VALUES.
SIMULTANEOUS VERTICAL FORCE - USE 1/3 X HORIZONTAL FORCE.

CONDUIT, BUSDUCT, CABLE TRAY, WIREWAYS, ETC., SHALL BE BRACED IN ACCORDANCE WITH "GUIDELINES", PUBLISHED BY SMACNA AND PPIC.

NOTICE
THESE DRAWINGS ARE SUBJECT TO AN APPROVAL OF THE BUILDING DEPARTMENT, FIRE MARSHAL, UTILITY COMPANY AND OTHER AGENCIES AUTHORITY HAVING JURISDICTION (AHJ). BY THE ACT OF SUBMITTING A BID PROPOSAL FOR WORK, THE CONTRACTOR HAS REVIEWED THE PLANS THOROUGHLY AND ACCEPT FULL RESPONSIBILITY OF PLAN CORRECTIONS AND ASSOCIATED CONSTRUCTION COSTS REQUIRED BY AHJ.

FIELD VERIFICATION:

1. WITHIN TEN (10) BUSINESS DAYS OF "NOTICE TO PROCEED" THE CONTRACTOR SHALL FIELD VERIFY EXISTING ELECTRICAL CONDITIONS IN THE PROPOSED PROJECT AREA.
2. THE CONTRACTOR SHALL NOTIFY BASE ENGINEERING AND THE ARCHITECT OF ALL DEVIATIONS FROM THESE PLANS WITHIN FIFTEEN (15) BUSINESS DAYS.
3. THE CONTRACTOR SHALL PROVIDE TIMELY ASSISTANCE IN PROVIDING FIELD INFORMATION TO THE ENGINEER FOR DESIGN CHANGES TO ADDRESS ANY REQUIRED FIELD CHANGES.

MC CABLE SHALL NOT BE USED. PREWIRED MC CABLE WHIPS FROM LIGHTING FIXTURES ARE ACCEPTABLE WHEN SUPPLIED WITH THE FIXTURE AND NO LONGER THAN 72".

ELECTRICIAN TO PROVIDE STAINLESS STEEL COVER PLATES FOR ALL LOW VOLTAGE JUNCTION BOXES.

NO UNDER SLAB ELECTRICAL WORK ALLOWED UNLESS OTHERWISE NOTED ON PLAN.

ELECTRICAL SYMBOLS LIST

NOTE: ALL DIMENSIONS GIVEN ARE TO DEVICE CENTERLINES. CONTRACTOR TO COORDINATE ALL INSTALLATIONS.

POWER DISTRIBUTION

- S_M SINGLE-POLE SWITCH, MANUAL MOTOR STARTER
- J-BOX (WITH FLEX CONNECTION TO EQUIPMENT.)
- DISCONNECT SWITCH, WITH RATING AS SHOWN ON PLANS
- COMBINATION DISCONNECT SWITCH / MOTOR STARTER FURNISHED BY ELECTRICAL CONTRACTOR.
- BRANCH CIRCUITRY CONCEALED IN WALL OR CEILING WITH ADDITIONAL #12 INSULATED GND. U.N.O. HATCHES INDICATE NUMBER OF CURRENT CARRYING CONDUCTORS. 'X' INDICATES ADDITIONAL INSULATED, ISOLATED GROUND CONDUCTORS.
- BRANCH CIRCUITRY HOMERUN TO PANEL AS NOTED ON PLANS
- INDICATES EXTERIOR UNDERGROUND WIRE RUNS.

LIGHTING & LIGHTING CONTROLS

- L1 LIGHTING FIXTURE. SUBSCRIPT LETTER DENOTES FIXTURE TYPE AS DESCRIBED IN LIGHT FIXTURE SCHEDULE.
- S_a SINGLE-POLE SWITCH @ 44" A.F.F. U.N.O. LOWER CASE LETTER DENOTES FIXTURE CONTROL. 300V. 20A.
- S_2 TWO-POLE SWITCH @ 44" A.F.F. U.N.O. LOWER CASE LETTER DENOTES FIXTURE CONTROL. 300V. 20A.
- S_P SINGLE-POLE LIGHT SWITCH WITH PILOT LIGHT @ 44" A.F.F. U.N.O. 300V. 20A.
- S OCCUPANCY SENSOR SWITCH WITH OFF CONTROL. AND ADJUSTABLE SETTINGS FOR TIME OFF DELAY, FOOTCANDLE LEVEL, AND MASKING. WATTSTOPPER OR EQUAL, MOUNT AT 44" A.F.F. U.N.O. USE PW-100 FOR OFFICES/CONF/ETC., WI-200 FOR CLASSROOMS/LARGE ROOMS/ETC.
- CEILING MOUNT DUAL TECHNOLOGY ULTRASONIC / P.I.R. MOTION SENSOR TO CONTROL POWER TO ROOM SWITCHES - WATTSTOPPER #DT-300 (WITH POWER PACK) OR EQUAL.

RECEPTACLES & COMMUNICATIONS OUTLETS

- DUPLEX CONVENIENCE OUTLET, 20A, 125V, MTD @ 18" A.F.F. U.N.O.
- SIMPLEX CONVENIENCE OUTLET, 20A, 125V, MTD @ 18" A.F.F. U.N.O.
- DUPLEX CONVENIENCE OUTLET MOUNTED 3" ABOVE COUNTERTOP BACKSPLASH OR APPROXIMATELY 44" A.F.F.
- GFCI DUPLEX CONVENIENCE OUTLET, 20A, 125V, 5 mA TRIP, MTD @ 18" A.F.F. U.N.O.
- GFCI DUPLEX CONVENIENCE OUTLET MOUNTED 3" ABOVE COUNTERTOP BACKSPLASH OR APPROXIMATELY 44" A.F.F.
- TELEPHONE OUTLET. PROVIDE FLUSH J-BOX @ + 18" AFF U.N.O W/ 1" CONDUIT W/ PULL WIRE TO MANAGER'S STATION. 'w' SUBSCRIPT INDICATES WALL PHONE AT 54" AFF.
- DATA OUTLET. PROVIDE FLUSH J-BOX @ + 18" A.F.F. U.N.O W/ 1" CONDUIT WITH PULL WIRE TO MANAGER'S STATION.
- COMBINATION TEL/DATA OUTLET. PROVIDE FLUSH J-BOX @ + 18" AFF U.N.O W/ 1" CONDUIT WITH PULL WIRE TO MANAGER'S STATION.
- T.V. SYSTEM DATA OUTLET. PROVIDE FLUSH J-BOX @ + 18" A.F.F. U.N.O W/ 1" CONDUIT WITH PULL WIRE TO MANAGER'S STATION. WHEN SHOWN ADJACENT RECEPTACLE, MOUNT AT RECEPTACLE HEIGHT. REFER TO RECEPTACLE FOR MOUNTING HEIGHT.
- SPECIAL PURPOSE RECEPTACLE MTD. @ 18" A.F.F. U.N.O., AMPERAGE AND PHASE AS NOTED ON PLANS, NEMA CONFIGURATION AS REQ'D.
- ISOLATED GROUND DUPLEX CONVENIENCE OUTLET (ORANGE), 20A.,125V., MTD @ +18" A.F.F.
- DOUBLE DUPLEX CONVENIENCE OUTLETS UNDER COMMON COVER
- ISOLATED DOUBLE DUPLEX CONVENIENCE OUTLETS (ORANGE) 20A.,125V.
- SPK SPEAKER

ABBREVIATIONS

A	AMPERES	M.C.B.	MAIN CIRCUIT BREAKER
AL.	ALUMINUM	M.L.O.	MAIN LUGS ONLY
A.F.F.	ABOVE FINISHED FLOOR	MTD.	MOUNTED
A.F.G.	ABOVE FINISHED GRADE	P.	POLE
C.	CONDUIT	SW.	SWITCH
C/B	CIRCUIT BREAKER	T.M.B.	TELEPHONE MOUNTING BOARD
CU.	COPPER	TYP.	TYPICAL
DISC.	DISCONNECT	U.N.O.	UNLESS NOTED OTHERWISE
F.	FUSE	V.	VOLTS
GFI	GROUND FAULT CURRENT INTERRUPTER	W.	WIRE
		W.P.	WEATHERPROOF
GND.	GROUND	XFMR	TRANSFORMER
H.P.	HORSE POWER	Ø	PHASE
k	1000		

PANDA EXPRESS CHINESE KITCHEN

PANDA RESTAURANT GROUP INC.
1683 Walnut Grove Ave.
Rosemead, California
91770
Telephone: 626.799.9898
Facsimile: 626.372.8288

All ideas, designs, arrangement and plans indicated or represented by this drawing are the property of Panda Express Inc. and were created for use on this specific project. None of these ideas, designs, arrangements or plans may be used by or disclosed to any person, firm, or corporation without the written permission of Panda Express Inc.

REVISIONS:

ISSUE DATE:

1	95% SUBMITTAL	05/15/2020

DRAWN BY:JMJ

PANDA PROJECT #: D7432
ARCH PROJECT #:

MARSHALL & BOLLWERK ENGINEERING, INC.
8881 Highway 92, Suite 400
Woodstock, Ga. 30189
p: (678) 795-0333, f: (678) 325-4559
e: mbe@mbeinc.net

GEORGIA REGISTERED No. 20016 PROFESSIONAL ENGINEER MICHAEL JONES 5-15-2020

PANDA EXPRESS
MINI-MALL - SPACE 115
INGERSOLL STREET
FT BENNING, GA

E-000

ELECTRICAL SYMBOLS
SPECIFICATIONS, NOTES

BID SET (2020/05/28) NOT FOR CONSTRUCTION

LIGHTING FIXTURE SCHEDULE

PROVIDED FOR INFORMATION ONLY.
VERIFY AND INSTALL PER ELECTRICAL DRAWING

[THIS INFORMATION WAS PROVIDED BY THE OWNER & THE CONTRACTOR SHALL COORDINATE w/ THE PANDA EXPRESS CONSTRUCTION MANAGER ANY CONFLICTS WITH MODEL NUMBERS OR AVAILABILITY.]
07-04-2013

ITEM	SYMBOL	DESCRIPTION	QTY.	MFR. & CAT. NO.	REMARK
INTERIOR LIGHTING ITEM					
L1	L1	EDGE-LIT LED PANEL 120-277V UE - UNIVERSAL VOLTAGE	5	MANUFACTURER: LSI FIXTURE: SPF24-LED-50-UE-DIM-35 LED 5000 LUMENS, 3500K COLOR	KITCHEN CEILING LIGHTS. FURNISHED BY LICENSEE / INSTALLED BY G.C.
L1EM	L1EM	2X4 EDGE-LIT LED PANEL 120-277V UE - UNIVERSAL VOLTAGE	3	MANUFACTURER: LSI FIXTURE: SPF24-LED-50-UE-DIM-35 LED 5000 LUMENS, 3500K COLOR	EMERGENCY KITCHEN CEILING LIGHTS FURNISHED BY LICENSEE/ INSTALLED BY GC
		NOT USED	0		
L2	L2	2X2 EDGE-LIT LED PANEL (SURFACE MOUNT) 120-277V UE - UNIVERSAL VOLTAGE	2	MANUFACTURER: LSI FIXTURE: SPF24-LED-50-UE-DIM-35 LED 5000 LUMENS, 3500K COLOR	KITCHEN CEILING LIGHTS. FURNISHED BY LICENSEE / INSTALLED BY G.C.
L4	L4	UNIVERSAL MOUNT EXIT SIGN, LED LIGHTED, 120V WITH BATTERY PACK, 2 FACE, GREEN LETTER	2	JUNO, NAVILTE, NIBLHO THERMOPLASTIC EMERGENCY LIGHT	EXIT SIGN FURNISHED BY G.C./ INSTALLED BY GC
L6B	L6B	WALK-IN COOLER FLUORESCENT LIGHT, 120 V 48"	2	KASON FIXTURE: # 18180F00048	FURNISHED BY WIC VENDOR, INSTALLED BY G.C.
L19	L19	DOWN LIGHT, RECESSED IN CEILING	10	ELITE HOUSING: LD6IC-AT LED MODULE: ELITE LED LIGHTING RL607-14W-120-FL-27K-W-WH	FURNISHED BY LICENSEE/ INSTALLED BY GC
L19EM	L19 EM	EMERGENCY DOWN LIGHT, RECESSED IN CEILING	1	ELITE HOUSING: LD6IC-AT LED MODULE: ELITE LED LIGHTING RL607-14W-120-FL-30K-SN-SN	EMERGENCY RECESSED DOWN LIGHT - NORMALLY ON INVERTER UNIT - ISOLITE, IMI-12-LC-V1 FURNISHED BY LICENSEE/ INSTALLED BY GC
L6A	L6A	HOOD LIGHT	10	FURNISHED & INSTALLED BY EQUIPMENT SUPPLIER	LIGHTS SUPPLIED & PRE-WIRED BY HOOD VENDOR. ELECTRIC CONTRACTOR TO CONNECT MAIN WIRES TO SHUNT TRIP BREAKER AND HOOD CONTROL PANEL
L20	L20	LED MR16 DOWN LIGHT, RECESSED IN CEILING	1	HOUSING: LIGHTOLIER LYTECASTER 302MRSPX TRIM: LIGHTOLIER LYTECASTER 378WHX (WHITE) BULB: LED MR16 MANUFACTURER: GE PRODUCT CODE: 35535	
		NOT USED	0		

EQUIPMENT SCHEDULE

[THIS INFORMATION WAS PROVIDED BY THE OWNER & THE CONTRACTOR SHALL VERIFY ALL ELECTRICAL REQUIREMENTS w/ EQUIPMENT VENDOR(S) PRIOR TO ROUGH-IN OF POWER. NOTIFY ARCHITECT OF ANY CONFLICTS WITH-IN 10 DAYS OF EQUIPMENT APPROVAL.]

ELECTRICAL			DESCRIPTION		
D DIRECT CONNECTION			P PANDA EXPRESS VENDOR	S SERVING AREA	
C CONVENIENT OUTLET			GC GENERAL CONTRACTOR	K KITCHEN	
FSO FLOOR STUB OUT			EC ELECTRICAL CONTRACTOR	(E) EXISTING	
DC DROPPED CORD			KEC KITCHEN EQUIPMENT COMPANY	(L) LICENSEE	

CONNECTION		LOAD	PHASE	H.P.	VOLTS	REMARKS	DIMENSIONS	MANUFACTURER	MODEL #	EQUIPMENT	NO.
R.I.H.	TYPE	WATT					W x D x H (Ø x H)				
										SERVING AREA EQUIPMENT	
						SEE DETAIL	SEE PLAN	KEC	CUSTOM	HOT WELLS COUNTER, SERVICE	1B
						SEE DETAIL	SEE PLAN	KEC	CUSTOM	SNEEZE GUARD	1S2
REF. ELEC.	D	840W	1		120	3 HEATING ELEMENTS	43.06" X 5.25" X 3.03"	KEC		43" RADIANT TOP HEATER	1S2b1
REF. ELEC.	D	1100W	1		120	4 HEATING ELEMENTS	55.56" X 5.25" X 3.03"	KEC		56" RADIANT TOP HEATER (2)	1S2b2
REF. ELEC.	D	15A	1		120	SEE DETAIL	SEE PLAN	KEC	CUSTOM	CASHER & BEVERAGE. COUNTER	2Q
REF. ELEC.	C	650W	1		120	INDUCTION DRY WELL	15 3/4" DIA X 11"D	IO CONTROLS	IDW650L	INDUCTION WELL - 17QT	3F
REF. ELEC.	C	650W	1		120	INDUCTION DRY WELL	12 1/2" DIA X 11"D	IO CONTROLS	IDW650S	INDUCTION WELL - 11QT	3G
	C		1	1/4	120			TRUE		COKE REFRIGERATOR	12B
										KITCHEN EQUIPMENT	
						SEE DETAIL	93"x42"	KEC	CUSTOM	124" CHINESE RANGE	20
24"	C	–	1		120		47"x31-1/2"x51-5/8"	FRYMASTER	FMJ350-PE	FRYER	21A
36"	DC	25A	3		208V		36"X27 7/8"X15 1/2"	STAR	536TGF	STAR ELECTRICAL GRILL	23B
24"	C	14.8A	1		120	NEMA 5	19.9"X34.5"X41.3"	WINSTON	HA4005	RICE HOLDING CABINET	24Hr
							19"#x17"	RINNAI	RER-55AS	RICE COOKER	25A
24"	C	12A	1	1/2	115	NEMA 5-15P	48"X30"X29 3/4"	RANDELL	65348-290	48" WORKTOP FREEZER	30J
130"	D	500W	1	1.5	120/208		SEE PLAN	GRE	CUSTOM	WALK-IN COOLER UNIT	31M
	D	10.0A	1	1.5	208		SEE PLAN	GRE	CUSTOM	WALK-IN COOLER COND.	31-S
130"	D	500W	1	1.5	120/208		SEE PLAN	GRE	CUSTOM	WALK-IN FREEZER	32M
	D	10.0A	1	1.5	208		SEE PLAN	GRE	CUSTOM	WALK-IN FREEZER COND.	32-S1
	D/ID	500W	1		120		SEE PLAN	GRE	CUSTOM	W.I.F. LTG, DOOR HEATER	32-S7
24"	C	12A	1	1/2	120	NEMA 5-15P	84"x33"x35"	RANDELL	9050K-7MP2-NSB	84" REF. PREP. TABLE	34Olfr
24"	C	5.5A	1	1/4	115	NEMA 5-15P	32"x33"x35"	RANDELL	9412-32-7MPL1-NSB	32" REF. PREP. TABLE	34Hrn
							100"X30"	KEC	CUSTOM-(PS-100L)	POT SINK	40A
						1 COMPARTMENT	42"x30"	KEC	CUSTOM-(VS-42)	42" VEGETABLE SINK (R)	41B
						1 COMPARTMENT	42"x30"	KEC	CUSTOM-(VS-42)	42" VEGETABLE SINK (L)	41C
18GA POLISHED (WALL MTD. @ 59" A.F.F.)							SEE PLAN	KEC	CUSTOM (NSF)	12"D S.S. WALL MTD. SHELF	43A
18GA POLISHED (WALL MTD. @ 71" A.F.F.)							SEE PLAN	KEC	CUSTOM (NSF)	16"D S.S. WALL MTD. SHELF	43B
4 SHELVES MTD. @ 8" A.F.F., 26" A.F.F., 54" A.F.F., 72" A.F.F.							SEE PLAN	GOLD BOND	ISS	18"D WIRE SHELVES	44A
4 SHELVES MTD. @ 36" A.F.F., 48" A.F.F., 60" A.F.F., 72" A.F.F.							SEE PLAN	GOLD BOND	ISS	24"D WIRE SHELVES	44C
							24"x 30" x 24"	KEC	CUSTOM	S.S. RICE COOKER STAND	46A
							36 1/2"x 33" x 28"	KEC	CUSTOM	S.S. GRILL STAND	46K
								KEC	CUSTOM	S.S. RICE WARMER STAND	46B
50"	C	2.8A	1	1/3	120		12 1/2"x21"	PIPER	GSM-4	FOOD PROCESSOR	53B
										SMALL EQUIPMENT	
						W/TOWEL & SOAP	14 1/4"x18 1/2"	GSW	HS-1615NPASS	HAND SINK	45A
24"	C	105W	1		120	ON S.S. COUNTER	17" ø	WELBON	WRS-1088BS	RICE WARMER	54A
84"	DC	1800W	1		208	PLUG: NEMA 6-15R	17 1/2"X13 5/8"X22 9/16"	SHARP	R-CD1800M	MICROWAVE	55A
						AS REQUIRED BY LOCAL FIRE DEPT., CHECK LOCATION WITH PROJECT MANAGER				FIRE EXTINGUISHER	56
							SEE DETAIL	SAN-JAMAR	SANJT7500TBK	PAPER TOWEL DISPENSER	60D
						WALL MOUNT	12"x15"x78"	GRE	S-TIER	LOCKER (2)	61B
										POS EQUIPMENT	
						SEE ELEV. ON E-200			CUSTOM	MANAGER STATION	49A
REF ELEV	C	100W	1		120	SEE DETAIL			CUSTOM	COMPUTER	83A
REF ELEV	C	50W	1		120	SEE PLAN				POS PRINTERS	86A
REF ELEV	C	50W	1		120					FAX	87
REF ELEV	C	500W	1		120	CUSTOM	11 1/4"x14 1/2"x9"	RESNOS	S 460	CASH REGISTER SYSTEM	94
										MEP EQUIPMENT	
						SEE MECH. DWG.	SEE PLAN	CAPTIVE AIR	CUSTOM	EXHAUST HOOD	M1
						SEE MECH. DWG.	SEE PLAN	CAPTIVE AIR	CUSTOM	HOOD CONTROL PANEL	M4
						SEE MECH. DWG	SEE PLAN	CAPTIVE AIR		FIRE SUPPRESSION SYSTEM	M5
						SEE MECH/ELEC DWG	SEE PLAN			RECESSED ANSUL PULL BOX	M6
	D					FLOOR TYPE	24" X 24" X 13"	G.S.W. PHONE:1800-897-5999	SE2424FM	STAINLESS STEEL MOP SIINK	P1
48"	C	50W	1		120	SEE PLAN	15" X 13"	DELL (17" COLOR)		LCD MONITOR-MANAGER	94-2-16
						SEE ELEC. DWG			EXISTING	ELECTRICAL PANEL	E7
										SIGNAGE	
REF ELEV	C	130W	1		120	DEDICATED CIRCUIT	48.9" X 28.1" X 1.3"	LG	55WS50BS-B	LCD DISPLAY MONITOR	96-3A
									SEE SIGN BOOK	LOCK-UP LOGO	S1
									SEE SIGN BOOK	LETTER SET SIGNAGE	S2
										FURNITURE	
						SEE PLAN		CUSTOM – QUARTZ	PALOMA WHITE	SERVICE COUNTER	F1d
										MISC. STAINLESS STEEL	
										SANITIZER BUCKET SHELF	SS-01

PANDA RESTAURANT GROUP INC.
1683 Walnut Grove Ave.
Rosemead, California
91770
Telephone: 626.799.9898
Facsimile: 626.372.8288

All ideas, designs, arrangement and plans indicated or represented by this drawing are the property of Panda Express Inc. and were created for use on this specific project. None of these ideas, designs, arrangements or plans may be used by or disclosed to any person, firm, or corporation without the written permission of Panda Express Inc.

REVISIONS:

ISSUE DATE:

1	95% SUBMITTAL	05/15/2020

DRAWN BY:JMJ

PANDA PROJECT #: D7432
ARCH PROJECT #:

MARSHALL & BOLLWERK ENGINEERING, INC.
8681 Highway 92, Suite 400
Woodstock, Ga. 30188
p: (678) 795-0333, f: (678) 325-4559
e: mbe@mbeinc.net

GEORGIA REGISTERED NO. 20016 PROFESSIONAL ENGINEER MICHAEL JONES 5-15-2020

BID SET (2020/05/28) NOT FOR CONSTRUCTION

PANDA EXPRESS

MINI-MALL - SPACE 115
INGERSOLL STREET
FT BENNING, GA

E-001

ELECTRICAL SCHEDULES

1. VERIFY ALL HVAC & KITCHEN EQUIPMENT PRIOR TO ROUGH IN.
2. ALL TELEPHONE/DATA/TV CABLES AND WIRES TERMINATIONS; ALL REQUIRED CABLE; AND JACKS WILL BE INSTALLED BY THIRD PARTY.
3. POWER SUPPLY FOR COMPUTER, CASH REGISTER (83A, & 86A, OR 87, & 94) SHALL BE ON THE SAME CIRCUIT BREAKER, W/ ISOLATED GROUND & ORANGE RECEPTACLE.
4. ALL CIRCUITRY SHOWN WITHOUT TICKS SHALL HAVE (2) WIRES PLUS EQUIPMENT GROUNDING CONDUCTOR.
5. WHEN WORKING IN JURISDICTIONS WHICH HAVE ADOPTED THE 2008 NEC OR LATER, ALL MULTI-WIRE BRANCH CIRCUITS SHALL HAVE SEPARATE NEUTRALS TO MEET THE REQUIREMENTS OF 2008 NEC 210.4(B).

POWER PLAN GENERAL NOTES 2

NOT TO SCALE E-100

1. ALL CIRCUITRY/CONDUIT FOR FRONT LINE EQUIPMENT TO BE ROUTED IN CASEWORK TO J-BOX IN WALL AND CONCEALED IN WALL.
2. PROVIDE (2) 1" CONDUITS WITH PULL STRINGS FROM CASH REGISTER TO MANAGER STATION. SEE P.O.S. AND SERVICE LINE ELEVATIONS, SHEET 3/E-200.
3. SEE 'MANAGER STATION ELEVATION' 1 / E-200 FOR ADDITIONAL OUTLETS AND J-BOXES.
4. ANSUL PULL STATION. REFER TO DETAIL, SHEET 2 / E-400.
5. HOOD CONTROL PANEL/ANSUL SYSTEM CABINET. MOUNT CABINET DIRECTLY BELOW T-BAR CEILING.
6. PROVIDE 2-GANG J-BOX @ 48" AFF FOR HOOD CONTROL SWITCHES. REFER TO M-400, M-401 AND M-402.
7. PROVIDE WP, IN-USE RED DOT (#CKSUV).
8. ALL DEVICES UNDER HOOD TO BE PROVIDED AND INSTALLED WITH SHUNT TRIP CIRCUIT BREAKER AND WATERPROOFING BOX (RED DOT #CKSUV). REFER TO COOKLINE ELECTRICAL ELEVATIONS, SHEET 6/E-200.
9. ELECTRIC GRILL '23B': FEED WITH 3 #8, #10 GROUND, 3/4" CONDUIT. PROVIDE A REMOTE GFI TRIP DEVICE IN ACCORDANCE w/ NEC 210.8 (B)(2). INSTALL IN AN ACCESSIBLE LOCATION IN THIS GENERAL AREA, OR AS DIRECTED BY THE OWNER, ARCHITECT OR ENGINEER. SEE DETAIL 2/E-200 FOR ADDITIONAL INFORMATION.
10. FURNISH AND INSTALL A HUBBELL GFSTBF20 FACELESS GFCI (OR EQUIVALENT) FOR CIRCUIT FEEDING EQUIPMENT BENEATH THE KITCHEN HOOD WHICH UTILIZE SINGLE 20A, 120V RECEPTACLES. INSTALL IN AN ACCESSIBLE LOCATION IN THIS GENERAL AREA, OR AS DIRECTED BY THE OWNER, ARCHITECT OR ENGINEER. PROVIDE ADDITIONAL OUTLETS AS REQUIRED TO FEED ALL SUCH LOADS BENEATH HOOD. FASTEN A PLASTIC LABEL STATING CIRCUIT AND EQUIPMENT SERVED FOR EACH OUTLET.
11. SEE 3/E-200 FOR SERVICE LINE ELEVATIONS.
12. CONNECT HEAT LAMPS TO COUNTER-MOUNTED SWITCH PROVIDED AND INSTALLED BY CONTRACTOR. REFER TO PLAN FOR LOCATIONS AND QUANTITIES.

(#) POWER PLAN KEYED NOTES 3

NOT TO SCALE E-100

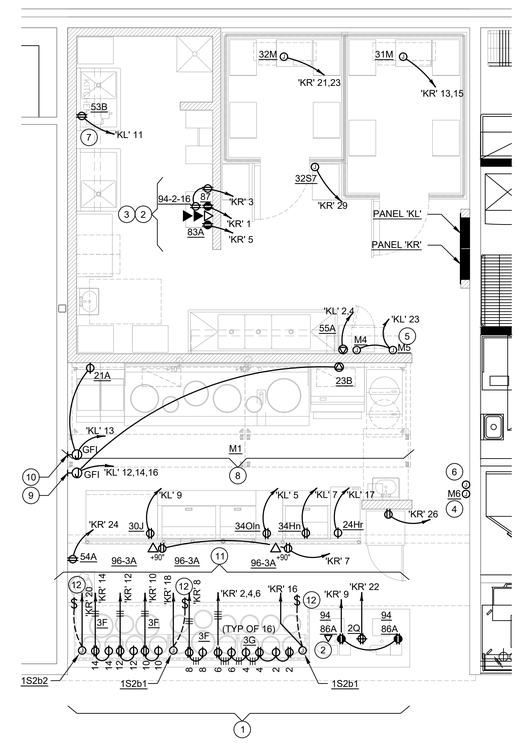

ALL SINGLE-PHASE RECEPTACLES RATED 150 VOLTS TO GROUND OR LESS, 50 AMPERES OR LESS AND THREE PHASE RECEPTACLES RATED 150 VOLTS TO GROUND OR LESS, 100 AMPERES OR LESS INSTALLED IN KITCHEN AREAS SHALL BE GROUND FAULT PROTECTED AS REQUIRED BY NEC 210.8 (B) (2).

NO UNDER SLAB ELECTRICAL WORK ALLOWED UNLESS OTHERWISE NOTED ON PLAN.

POWER FLOOR PLAN 1

Scale: 1/4"=1'-0" E-100

BID SET (2020/05/28) NOT FOR CONSTRUCTION

PANDA RESTAURANT GROUP INC.
1683 Walnut Grove Ave.
Rosemead, California
91770
Telephone: 626.799.9898
Facsimile: 626.372.8288

All ideas, designs, arrangement and plans indicated or represented by this drawing are the property of Panda Express Inc. and were created for use on this specific project. None of these ideas, designs, arrangements or plans may be used by or disclosed to any person, firm, or corporation without the written permission of Panda Express Inc.

REVISIONS:

ISSUE DATE:

1	95% SUBMITTAL	05/15/2020

DRAWN BY:JMJ

PANDA PROJECT #: D7432
ARCH PROJECT #:

MARSHALL & BOLLWERK ENGINEERING, INC.
8681 Highway 92, Suite 400
Woodstock, Ga. 30189
p: (678) 795-0333, f: (678) 325-4559
e: mbe@mbeinc.net

GEORGIA REGISTERED NO. 22016 PROFESSIONAL ENGINEER MICHAEL JONES 5-15-2020

PANDA EXPRESS

MINI-MALL - SPACE 115
INGERSOLL STREET
FT BENNING, GA

E-100

POWER FLOOR PLAN

NOTE:
CONTRACTOR TO INSTALL 3 GANG SWITCH BOX AS SHOWN BELOW. DO NOT INSTALL SEPARATE/INDIVIDUAL BOXES FOR EACH SWITCH

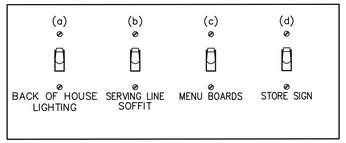

SWITCHBANK 'A' SCHEDULE

TAG	SWITCH TYPE	AREA SERVED / SWITCH LABEL	CIRCUIT	LOAD
a	TOGGLE SWITCH	BACK-OF-HOUSE	'KL' 1	550 VA
b	TOGGLE SWITCH	SERVING LINE SOFFIT	'KL' 1	173 VA
c	TOGGLE SWITCH	MENU, LED ACCENTS	'KR' 7	900 VA
d	TOGGLE SWITCH	STORE SIGN	'KL' 3	1,200 VA

LIGHTING SWITCHBANK SCHEDULE 4
NOT TO SCALE E-101

1. SWITCHBANK 'A'. REFER TO SCHEDULE THIS SHEET (4/ E-101).
2. ROUTE HOMERUN THROUGH LIGHTING SWITCHBANK 'A' (SWITCHES AS NOTED IN LOWER CASE). REFER TO SCHEDULE (4/E-101) FOR MORE INFORMATION.
3. ROUTE THROUGH CONTACTS IN HOOD CONTROL PANEL 'M4' FOR CIRCUIT POWER. REFER TO DETAILS, SHEETS 8 / E-400.
4. PROVIDE SEPARATE UN-SWITCHED HOT CONDUCTOR TO NIGHT LIGHT "NL" FIXTURES AND EMERGENCY FIXTURES. CONNECT TO EXISTING EMERGENCY LIGHTING CIRCUIT SERVING THIS AREA.
5. J-BOX FOR SIGNAGE. COORDINATE LOCATION WITH ARCHITECT / OWNER / SIGN PACKAGE. SIGN DISCONNECT PROVIDED BY SIGN CONTRACTOR.
6. DUPLEX RECEPTACLE AT SOFFIT FOR LED ROPE. INSTALL ON BACK OF BULKHEAD. COORDINATE w/ ARCHITECTURAL PLANS & PANDA EXPRESS CONSTRUCTION MANAGER FOR MORE INFORMATION.

LIGHTING KEYED NOTES 3
NOT TO SCALE E-101

1. CONTRACTOR SHALL PROVIDE ALL REQUIRED HARDWARE, BRACKETS, ETC. FOR A COMPLETE INSTALLATION.
2. ALL LIGHTING FIXTURES SHALL BE SUPPORTED PER N.E.C. 410-16(C). SEE DETAIL, SHEET 1 / E-4.00.
3. CONTRACTOR SHALL INSTALL ALL LIGHTING FIXTURES INCLUDING OWNER-FURNISHED FIXTURES.
4. ALL FIXTURE BALLASTS/DRIVERS SHALL BE U.L. LISTED.
5. G.C. SHALL INSTALL OWNER SUPPLIED LED ROPE LIGHT & CUT TO PROPER LENGTH
6. WHEN WORKING IN JURISDICTIONS WHICH HAVE ADOPTED THE 2008 NEC OR LATER, ALL MULTI-WIRE BRANCH CIRCUITS TO HAVE SEPARATE NEUTRALS TO MEET THE REQUIREMENTS OF 2008 NEC 210.4(B).
7. ALL CIRCUITRY SHOWN WITHOUT TICKS SHALL HAVE (2) WIRES PLUS EQUIPMENT GROUNDING CONDUCTOR.
8. 'N.L.' DESIGNATION INDICATES NIGHT LIGHT ON UN-SWITCHED CIRCUIT.

LIGHTING GENERAL NOTES 2
NOT TO SCALE E-101

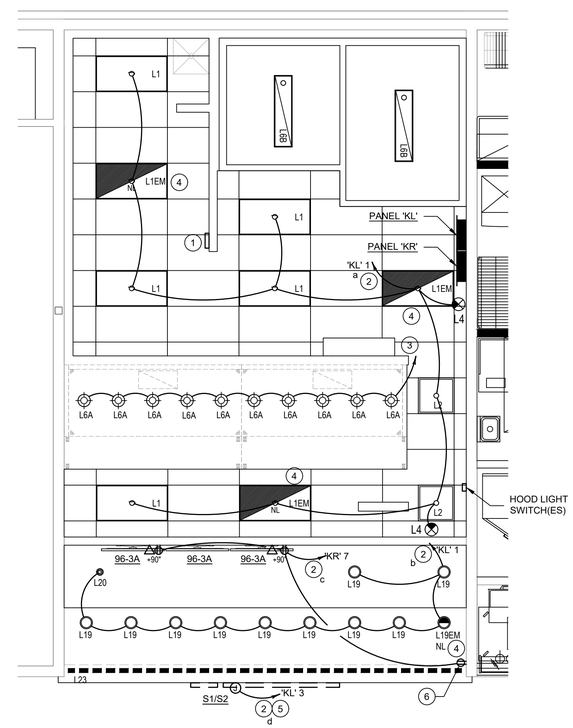

LIGHTING FLOOR PLAN 1
Scale: 1/4"=1'-0" E-101

BID SET (2020/05/28) NOT FOR CONSTRUCTION

PANDA EXPRESS CHINESE KITCHEN

PANDA RESTAURANT GROUP INC.
1683 Walnut Grove Ave.
Rosemead, California
91770
Telephone: 626.799.9898
Facsimile: 626.372.8288

All ideas, designs, arrangement and plans indicated or represented by this drawing are the property of Panda Express Inc. and were created for use on this specific project. None of these ideas, designs, arrangements or plans may be used by or disclosed to any person, firm, or corporation without the written permission of Panda Express Inc.

REVISIONS:

ISSUE DATE:

1	95% SUBMITTAL	05/15/2020

DRAWN BY: MJ

PANDA PROJECT #: D7432
ARCH PROJECT #:

MARSHALL & BOLLWERK ENGINEERING, INC.
8681 Highway 92, Suite 400
Woodstock, Ga. 30189
p: (678) 795-0333, f: (678) 325-4559
e: mbe@mbeinc.net

GEORGIA REGISTERED No. 20016 PROFESSIONAL ENGINEER MICHAEL JONES 5-15-2020

PANDA EXPRESS

MINI-MALL - SPACE 115
INGERSOLL STREET
FT BENNING, GA

E-101

LIGHTING FLOOR PLAN

ROOFTOP EQUIPMENT SCHEDULE

TAG	DESCRIPTION	kW	H.P.	FLA	VOLT/Ø	WIRE, CONDUIT	CONN.	MOUNT HEIGHT	DISC. SW. WITH RK1 FUSES PER MFR'S REQ'S. AND/OR REMARKS
CU-1	CONDENSING UNIT			21.4	208V.3Ø	3 #10, #10 GND., 3/4" C.		AT UNIT	30A. 3P. 3F. WP (1) (2) (3)
CU-2	CONDENSING UNIT			21.4	208V.3Ø	3 #10, #10 GND., 3/4" C.		AT UNIT	30A. 3P. 3F. WP (1) (2) (3)
MA-1	MAKE-UP AIR UNIT		5.0	15.0	208V.3Ø	3 #10, #10 GND., 3/4" C.		AT UNIT	30A. 3P. 3F. WP (1) (3)
EF-1	EXHAUST FAN		2.0	5.9	208V.3Ø	3 #12, #12 GND., 3/4" C.		AT UNIT	30A. 3P. 3F. WP (1) (3)
EF-2	EXHAUST FAN		2.0	5.9	208V.3Ø	3 #12, #12 GND., 3/4" C.		AT UNIT	30A. 3P. 3F. WP (1) (3)

(1) DISCONNECT SWITCH PROVIDED WITH UNIT.

(2) COMBINATION 30A. 3P. 3F. WP DISCONNECT SWITCH WITH RK5 FUSES PER MANUFACTURER RECOMMENDATION.

(3) ELECTRICAL FEEDS ARE TO BE ROUTED FROM PLENUM SPACE, UP THROUGH EQUIPMENT CURB, INTO BOTTOM OF EQUIPMENT, THROUGH FACTORY INSTALLED WATER TIGHT CONNECTIONS.

HVAC EQUIPMENT SCHEDULE 4

NOT TO SCALE E-104

1. STUB ELECTRICAL FEED FOR EF-1 & EF-2, THROUGH ROOF ON HINGE SIDE OF EXHAUST FANS, IN LOCATION AS SHOWN ON POWER ROOF PLAN. REFER TO DETAIL 3/M-501 FOR ADDITIONAL DETAILS.
2. CIRCUIT FEEDS FROM PANELBOARD - THROUGH HOOD CONTROL PANEL - UP TO ROOF. REFER TO DETAIL, SHEET 8 / E-400 & KITCHEN HOOD SUBMITTAL DATA.
3. FEED THROUGH FACTORY THRU BASE CONNECTION AREA. COORDINATE WITH MECHANICAL.

(#) ROOF PLAN KEYED NOTES 3

NOT TO SCALE E-104

1. ALL ROOF MOUNTED EQUIPMENT SHALL BE IN NEMA-3R ENCLOSURES.
2. ALL CONDUIT RUNS SHOWN ON THE ROOF SHALL BE RUN BELOW THE ROOF IN THE CEILING SPACE WHERE AMBIENT TEMPERATURE WILL BE BELOW 30° C. FINAL CONNECTIONS TO THE ROOF EQUIPMENT IS LIMITED TO 5'-0" OF DIRECT SOLAR EXPOSURE.
3. G.C. COORDINATE ELECTRICAL, MECHANICAL, FIRE ALARM (IF REQUIRED) FOR INTERLOCK SEQUENCE.
4. VERIFY ALL FUSE SIZES AND TYPES WITH THE EQUIPMENT MANUFACTURER PRIOR TO INSTALLATION.

ROOF PLAN GENERAL NOTES 2

NOT TO SCALE E-104

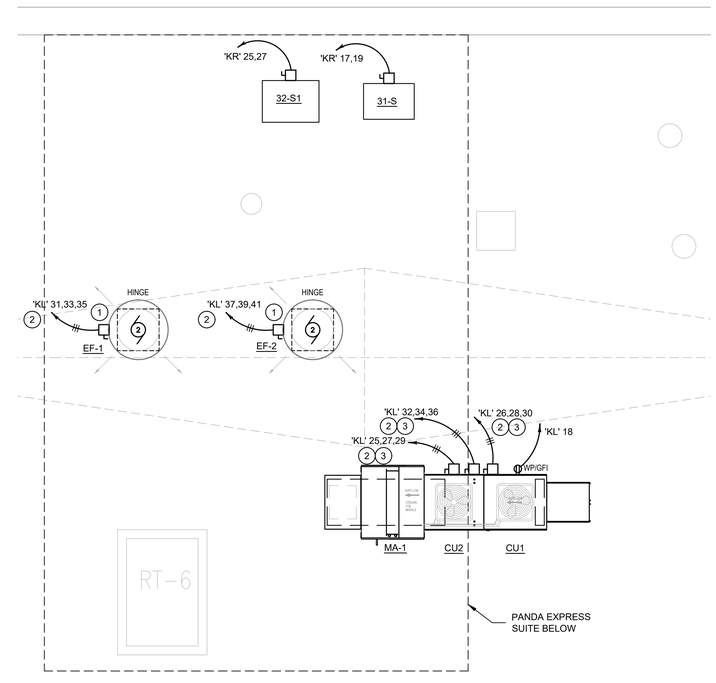

ROOF POWER PLAN 1

Scale: 1/4"=1'-0" E-104

BID SET (2020/05/28) NOT FOR CONSTRUCTION

PANDA RESTAURANT GROUP INC.
1683 Walnut Grove Ave.
Rosemead, California
91770
Telephone: 626.799.9898
Facsimile: 626.372.8288

All ideas, designs, arrangement and plans indicated or represented by this drawing are the property of Panda Express Inc. and were created for use on this specific project. None of these ideas, designs, arrangements or plans may be used by or disclosed to any person, firm, or corporation without the written permission of Panda Express Inc.

REVISIONS:

ISSUE DATE:

1	95% SUBMITTAL	05/15/2020

DRAWN BY:JMJ

PANDA PROJECT #: D7432

ARCH PROJECT #:

MARSHALL & BOLLWERK ENGINEERING, INC.
8681 Highway 92, Suite 400
Woodstock, Ga. 30189
p: (678) 795-0333, f: (678) 325-4558
e: mbe@mbeinc.net

GEORGIA REGISTERED PROFESSIONAL ENGINEER NO. 20016 MICHAEL JONES 5-15-2020

PANDA EXPRESS

MINI-MALL - SPACE 115
INGERSOLL STREET
FT BENNING, GA

E-104

POWER FLOOR PLAN

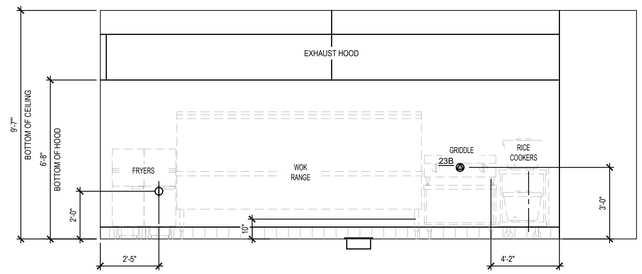

COOKLINE ELECTRICAL ELEVATIONS | 4

NOT TO SCALE | E-200

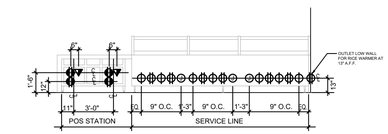

P.O.S. & SERVICE LINE ELEVATION | 3

NOT TO SCALE | E-200

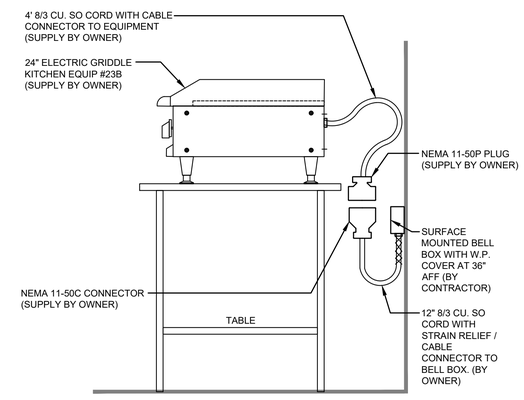

DETAIL AT ELECTRIC GRIDDLE (23B) | 2

NOT TO SCALE | E-200

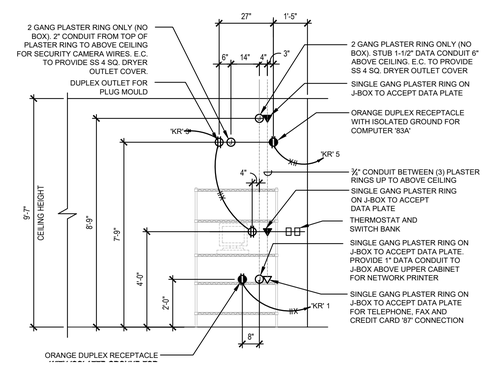

MANAGER STATION ELEVATIONS | 1

NOT TO SCALE | E-200

PANDA RESTAURANT GROUP INC.
1683 Walnut Grove Ave.
Rosemead, California
91770
Telephone: 626.799.9898
Facsimile: 626.372.8288

All ideas, designs, arrangement and plans indicated or represented by this drawing are the property of Panda Express Inc. and were created for use on this specific project. None of these ideas, designs, arrangements or plans may be used by or disclosed to any person, firm, or corporation without the written permission of Panda Express Inc.

REVISIONS:

ISSUE DATE:

1	95% SUBMITTAL	05/15/2020

DRAWN BY:JMJ

PANDA PROJECT #: D7432
ARCH PROJECT #:

MARSHALL & BOLLWERK ENGINEERING, INC.
8681 Highway 92, Suite 400
Woodstock, Ga. 30188
p: (678) 785-0333, f: (678) 325-4559
e: mbe@mbeinc.net

GEORGIA REGISTERED PROFESSIONAL ENGINEER NO. 20016 MICHAEL JONES 5-15-2020

BID SET (2020/05/28) NOT FOR CONSTRUCTION

PANDA EXPRESS

MINI-MALL - SPACE 115
INGERSOLL STREET
FT BENNING, GA

E-200

ELECTRICAL ELEVATIONS

NOT USED 10
NOT TO SCALE E-400

NOT USED 4
NOT TO SCALE E-400

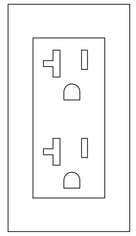

ALL OUTLETS TO MOUNT VERTICALLY WITH GROUND PLUG @ LOW POSITION, TYP. U.N.O.

ALL OTHER OUTLETS IN KITCHEN, SERVICE AREA, DINING AREA AND RESTROOMS TO BE GREY DEVICES WITH STAINLESS STEEL COVERPLATES.

NOT USED 9
NOT TO SCALE E-400

NOT USED 7
NOT TO SCALE E-400

RECEPT. DIAGRAM 3
NOT TO SCALE E-400

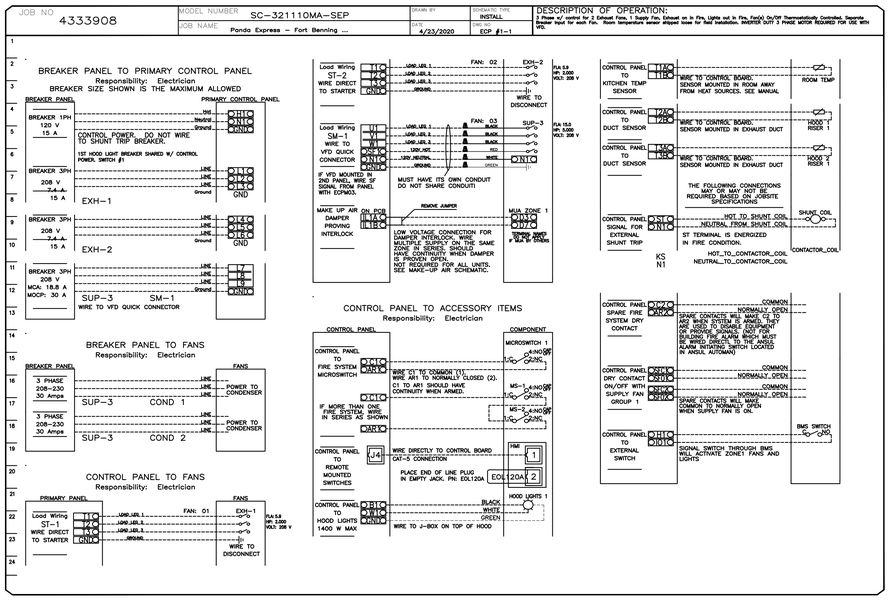

KITCHEN EXHAUST SYSTEM DIAGRAM 8
NOT TO SCALE E-400

NOT USED 6
NOT TO SCALE E-400

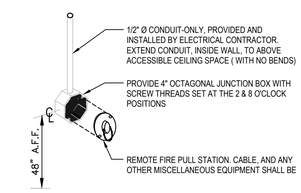

ANSUL PULL STATION DETAIL 2
NOT TO SCALE E-400

NOT USED 5
NOT TO SCALE E-400

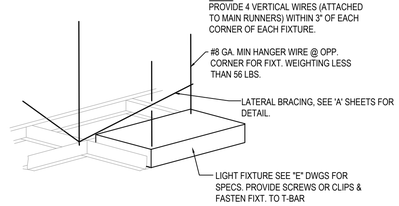

LIGHT FIXTURE DETAIL 1
NOT TO SCALE E-400

PANDA RESTAURANT GROUP INC.
1683 Walnut Grove Ave.
Rosemead, California
91770
Telephone: 626.799.9898
Facsimile: 626.372.8288

All ideas, designs, arrangement and plans indicated or represented by this drawing are the property of Panda Express Inc. and were created for use on this specific project. None of these ideas, designs, arrangements or plans may be used by or disclosed to any person, firm, or corporation without the written permission of Panda Express Inc.

REVISIONS:

ISSUE DATE:

1	95% SUBMITTAL	05/15/2020

DRAWN BY:JMJ

PANDA PROJECT #: D7432

ARCH PROJECT #:

MARSHALL & BOLLWERK ENGINEERING, INC.
8681 Highway 92, Suite 400
Woodstock, Ga. 30189
p: (678) 795-0333, f: (678) 325-4559
e: mbe@mbeinc.net

GEORGIA REGISTERED NO. 30016 PROFESSIONAL ENGINEER MICHAEL JONES 5-15-2020

BID SET (2020/05/28) NOT FOR CONSTRUCTION

PANDA EXPRESS

MINI-MALL - SPACE 115
INGERSOLL STREET
FT BENNING, GA

E-400

ELECTRICAL DETAILS, DIAGRAMS

"K" (NEW) PANELBOARD

MOUNTING: FLUSH
LOCATION: BACK OF HOUSE.
TYPE: BOLT ON BKRS. w/ GROUND BUS
NEMA RATING: 1

PROVIDE AN ARC FLASH WARNING SIGN PER NEC 110.16.

(THIS PANEL IS TO BE FURNISHED & INSTALLED BY E.C..)

208Y/120V, 3ϕ, 4W
100A MCB
RATED 10 k A.I.C.
GROUND BUS

	BRKR	DESCRIPTION	WIRE	BKR	PL	kVA A	kVA B	kVA C	PL	BKR	WIRE	DESCRIPTION	BRKR	
IG	1	FAX '87', MGR STA '49A'	12	20	1	0.72	1.30		1	20	10	INDUCTION DRY WELL 3F, 3G-GFI	2	1
	3	VCR MONITOR '92-2-1/6'	12	20	1		0.36	1.30	1	20	10	INDUCTION DRY WELL 3F, 3G-GFI	4	1
IG	5	COMP '83A', MGR STA '49A'	12	20	1			0.18	1.30	1	20	10	INDUCTION DRY WELL 3G-GFI	6	1
*	7	MENU BOARDS - RECEPS. '96-3A'	12	20	1	0.54	1.95		1	20	10	INDUCTION DRY WELL 3F, 3G-GFI	8	1
IG	9	SER. AREA POS'S 84, PTRS '86A'	12	20	1		0.36	1.30	1	20	10	INDUCTION DRY WELL 3G-GFI	10	1
	11	SPARE	12	20	1			0.00	1.30	1	20	10	INDUCTION DRY WELL 3G-GFI	12	1
	13	WALK-IN COOLER EVAP. - '31M'	12	15	2	0.25	1.30		1	20	10	INDUCTION DRY WELL 3G-GFI	14	1
	15						0.25	0.84	1	20	12	RADIANT TOP HEATER '1S2B1'	16	1
	17	WALK-IN COOLER COND. - '31-S'	12	15	2			1.04	0.84	1	20	12	RADIANT TOP HEATER '1S2B1'	18	1
	19					1.04	1.10			1	20	12	RADIANT TOP HEATER '1S2B2'	20	1
	21	WALK-IN FREEZER EVAP. - '32M'	12	15	2		0.25	1.80		1	20	12	SERVING COUNTER '2G'	22	1
	23							0.25	0.18	1	20	12	RICE WARMER '54A'	24	1
	25	WALK-IN FREEZER COND. - '32-S1'	12	15	2	1.04	0.80			1	20	12	COKE REFRIG. '12B'	26	
	27						1.04	0.00		1	20	-	SPARE	28	1
	29	[illegible]	12	20	1			0.50	0.00	1	20	-	SPARE	30	
	31	SPACE	-	-	1	0.00	0.00			1	20	-	SPARE	32	
	33	SPACE	-	-	1		0.00	0.00		1	20	-	SPARE	34	
	35	SPACE	-	-	1			0.00	0.00	1	20	-	SPARE	36	
	37	SPACE	-	-	1	0.00	0.00			1	-	-	SPACE	38	
	39	SPACE	-	-	1		0.00	0.00		1	-	-	SPACE	40	
	41	SPACE	-	-	1			0.00	0.00	1	-	-	SPACE	42	
					TOTAL	10.04	7.50	5.59	kVA					
		PER NEC ARTICLE 220				84	63	47	AMPS					
			TOTAL FEEDER LOAD			23.13	kVA	64	AMPS					

NOTES:
- * LOAD SHOWN IS ADJUSTED BY 125% PER NEC IN THE FEEDER LOAD CALCULATION.
- ■ PROVIDE LOCK-ON/OFF DEVICE AT CIRCUIT BREAKER.
- IG PROVIDE ISOLATED GROUND CONDUCTOR WITH THIS CIRCUIT.

1 KITCHEN LOAD SHOWN IS ADJUSTED BY 65% PER NEC IN THE FEEDER LOAD CALCULATION.
2 LOAD IS NON-SIMULTANEOUS TO OTHER KITCHEN EQUIPMENT AND IS NOT FIGURED IN FEEDER LOAD TOTALS.

"M" (NEW) PANELBOARD

MOUNTING: FLUSH
LOCATION: BACK OF HOUSE.
TYPE: BOLT ON BKRS. w/ GROUND BUS
NEMA RATING: 1

PROVIDE AN ARC FLASH WARNING SIGN PER NEC 110.16.

(THIS PANEL IS TO BE FURNISHED & INSTALLED BY E.C..)

208Y/120V, 3ϕ, 4W
200A MCB
RATED 10 k A.I.C.
GROUND BUS

	BRKR	DESCRIPTION	WIRE	BKR	PL	kVA A	kVA B	kVA C	PL	BKR	WIRE	DESCRIPTION	BRKR	
*	1	LIGHTS	12	20	1	0.70	0.90		2	15	12	MICROWAVE - 55A	2	1
*	3	LOGO 'S2'/I.D. SIGN 'S1'	12	20	1		1.20	0.90					4	
1	5	REF. PREP TABLE '34Oh'	12	20	1			1.44	0.00	1	15	-	SPARE	6
1	7	REF. PREP TABLE '34Hh'	12	20	1	0.66	0.00		1	20	-	SPARE	8	
1	9	WORKTOP FRZR '30J'	12	20	1		1.44	0.00	-	-	-	(SHUNT TRIP)	10	
1	11	FOOD PROCESSOR '53B'	12	20	1			0.34	3.00				12	
■ 1	13	FRY. CONTROL '21A'	12	20	1	1.20	3.00		3	35	10	24" ELECTRIC GRIDDLE - '23B'	14	■ 1
	15	(SHUNT)	-	-	-		0.00	3.00					16	
■ 1	17	RICE HOLDING CABINET '24Hr'	10	20	1			1.78	1.50	1	20	12	RECEPT. ON ROOF	18
	19	(SHUNT)	-	-	-	0.00	0.00			1	20	-	SPARE	20
	21	SPARE	-	20	1		0.00	0.00		1	20	-	SPARE	22
	23	HOOD/ANSUL CONT PNL 'M4' & 'M5'	12	20	1			1.00	0.00	1	20	-	SPARE	24
	25					1.80	2.09						26	
	27	MAK-UP AIR UNIT - 'MA-1'	10	30	3		1.80	2.09	3	30	10	CONDENSING UNIT - 'CU1'	28	
	29							1.80	2.09				30	
	31					0.71	2.09						32	
	33	HOOD EXHAUST FAN - 'EF1'	12	15	3		0.71	2.09	3	30	10	CONDENSING UNIT - 'CU2'	34	
	35							0.71	2.09				36	
	37					0.71	0.00						38	
	39	HOOD EXHAUST FAN - 'EF2'	12	15	3		0.71	0.00	3	45	-	SPARE	40	
	41							0.71	0.00				42	
					TOTAL	13.85	13.93	16.44	kVA					
		PER NEC ARTICLE 220				115	116	137	AMPS					
			TOTAL FEEDER LOAD			44.23	kVA	123	AMPS					

NOTES:
- * LOAD SHOWN IS ADJUSTED BY 125% PER NEC IN THE FEEDER LOAD CALCULATION.
- ■ PROVIDE SHUNT TRIP TYPE CIRCUIT BREAKER.
- IG PROVIDE ISOLATED GROUND CONDUCTOR WITH THIS CIRCUIT.

1 KITCHEN LOAD SHOWN IS ADJUSTED BY 65% PER NEC IN THE FEEDER LOAD CALCULATION.
2 LOAD IS NON-SIMULTANEOUS TO OTHER KITCHEN EQUIPMENT AND IS NOT FIGURED IN FEEDER LOAD TOTALS.

PANEL SCHEDULES 1
NOT TO SCALE E-601

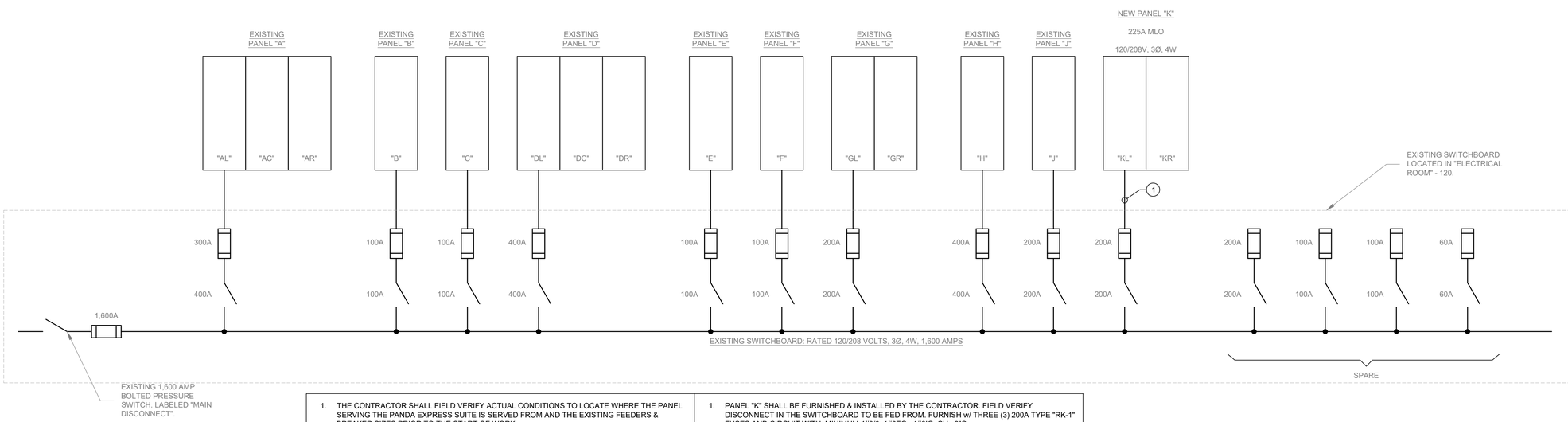

1. THE CONTRACTOR SHALL FIELD VERIFY ACTUAL CONDITIONS TO LOCATE WHERE THE PANEL SERVING THE PANDA EXPRESS SUITE IS SERVED FROM AND THE EXISTING FEEDERS & BREAKER SIZES PRIOR TO THE START OF WORK.
2. THE PANELBOARDS ARE EXISTING TO REMAIN, UNO.
3. ALL WIRE #8 AND SMALLER TO BE THWN/THHN CU.; #6 AND LARGER TO BE XHHW CU.
4. UNLESS NOTED, ALL DEVICES AND TERMINATIONS 100 AMPS AND LESS TO BE RATED FOR 60°C WIRE, OVER 100 AMPS, 75°C WIRE.

SINGLE LINE DIAGRAM GENERAL NOTES 4
NOT TO SCALE E-601

1. PANEL "K" SHALL BE FURNISHED & INSTALLED BY THE CONTRACTOR. FIELD VERIFY DISCONNECT IN THE SWITCHBOARD TO BE FED FROM. FURNISH w/ THREE (3) 200A TYPE "RK-1" FUSES AND CIRCUIT WITH, MINIMUM 4#3/0, 1#6EG., 1#6IG. CU., 2"C..

SINGLE LINE DIAGRAM KEYED NOTES 3
NOT TO SCALE E-601

EXISTING SINGLE LINE DIAGRAM 2
NOT TO SCALE E-601

PANDA EXPRESS
CHINESE KITCHEN

PANDA RESTAURANT GROUP INC.
1683 Walnut Grove Ave.
Rosemead, California
91770
Telephone: 626.799.9898
Facsimile: 626.372.8288

All ideas, designs, arrangement and plans indicated or represented by this drawing are the property of Panda Express Inc. and were created for use on this specific project. None of these ideas, designs, arrangements or plans may be used by or disclosed to any person, firm, or corporation without the written permission of Panda Express Inc.

REVISIONS:

ISSUE DATE:

1	95% SUBMITTAL	05/15/2020

DRAWN BY:JMJ

PANDA PROJECT #: D7432
ARCH PROJECT #:

MARSHALL & BOLLWERK ENGINEERING, INC.
8681 Highway 92, Suite 400
Woodstock, Ga. 30189
p: (678) 795-0333, f: (678) 325-4559
e: mbe@mbeinc.net

GEORGIA REGISTERED NO. 30016 PROFESSIONAL ENGINEER MICHAEL JONES 5-15-2020

BID SET (2020/05/28) NOT FOR CONSTRUCTION

PANDA EXPRESS

MINI-MALL - SPACE 115
INGERSOLL STREET
FT BENNING, GA

E-601

PANEL SCHEDULES & LOAD CALC'S